APPENDIX F

ROCSAW SPECIFICATIONS

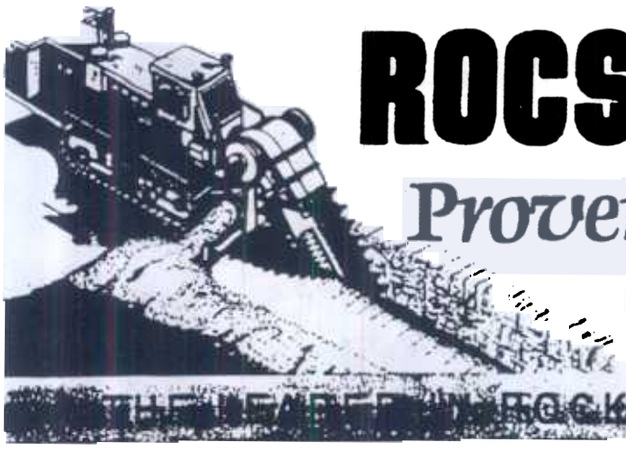

ROCSAW® TRENCHER

Proven World Wide

LEADER SINCE 1974

THE LEADER IN ROCK TRENCHING TECHNOLOGY

ROCSAW® Trenchers are built to fit Caterpillar's® D6/D7/D8/ D9/D10 and D11 power modules.

Now, a size to fit any construction job.

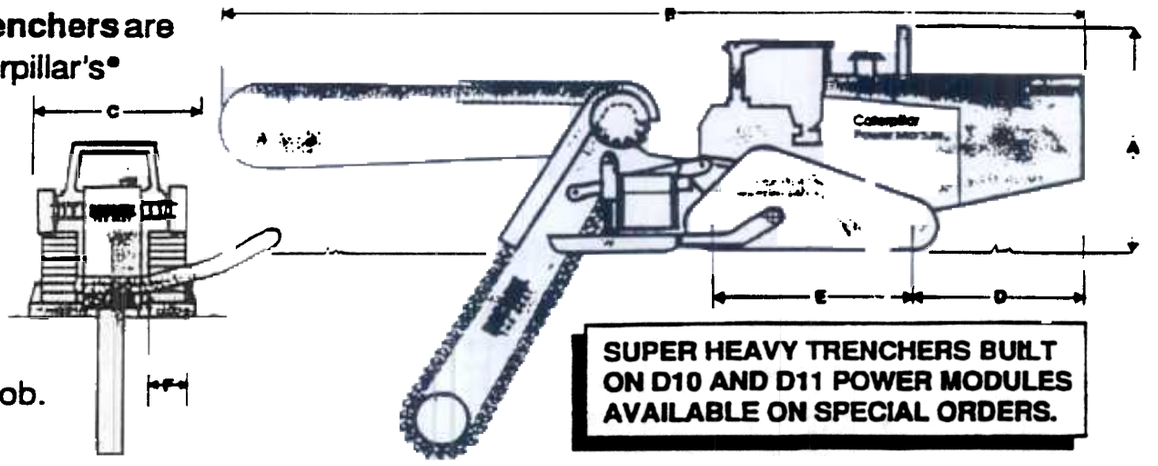

SUPER HEAVY TRENCHERS BUILT ON D10 AND D11 POWER MODULES AVAILABLE ON SPECIAL ORDERS.

NOMENCLATURE	SPECIFICATIONS	RS8-D6	RS10-D7	RS12-D8	RS15-D9
MACHINE	Approximate weight	50,672 lbs.	63,126 lbs.	105,000 lbs.	142,000 lbs.
	Height (A)	10 ft. 5 in.	11 ft. 3 in.	12 ft. 7 in.	13 ft. 0 in.
	Length (B)	30 ft. 0 in.	42 ft. 0 in.	49 ft. 8 in.	50 ft. 2 in.
	Width (C)	9 ft. 0 in.	9 ft. 0 in.	10 ft. 0 in.	10 ft. 5 in.
	Length (D)	8 ft. 0 in.	7 ft. 6 in.	10 ft. 0 in.	10 ft 10 in.
TRACK	Length (E)	9 ft. 2 in.	10 ft. 1 in.	10 ft. 6 in.	11 ft. 5 in.
	Width (F)	0 ft. 22 in.	0 ft. 22 in.	0 ft. 22 in.	0 ft. 25 in.
	Area	4,840 sq. in.	5,456 sq. in.	5,544 sq. in.	6,850 sq. in.
ENGINE	Caterpillar 3508 TA	475 hp	475 hp	1,000 hp	1,000 hp
HYDRAULIC SYSTEMS	Open- & closed-loop systems.				
	Oil type	Mineral	Mineral	Mineral	Mineral
	Filtration, high & low pressure	10 micron	10 micron	10 micron	10 micron
	Reservoir capacity	125 gallon	125 gallon	320 gallon	320 gallon
	Oil coolers: air/oil type	40 hp	40 hp	80 hp	80 hp
TRENCH DIMENSIONS (Standard Maximum is for continuous operation in hard material)	Standard maximum Depth	8 feet	10 feet	12 feet	15 feet
	Single chain Width	14 inches	14 inches	14 inches	14 inches
	Single chain Width	18 inches	18 inches	18 inches	18 inches
	Single chain Width	24 inches	24 inches	24 inches	24 inches
	Double chain Width	30 inches*	36 inches**	42 inches*	48 inches**
		*6 foot max.	**8 foot max.	*10 foot max.	**12 foot max.
FUEL TANK (Additional tanks are available)	Fuel tank capacity	130 gallons	130 gallons	199 gallons	255 gallons
	Fuel consumption rate, full load	15 gal./hour	19 gal./hour	32 gal./hour	40 gal./hour
	Fuel operating range	9 hours	7 hours	6 hours	6 hours
CONVEYOR	Belt speed	0-750 ft./min.	0-750 ft./min.	0-750 ft./min.	0-750 ft./min.
	Belt width	30 inches	30 inches	30 inches	30 inches

MODEL 1460HD SPECIFICATIONS

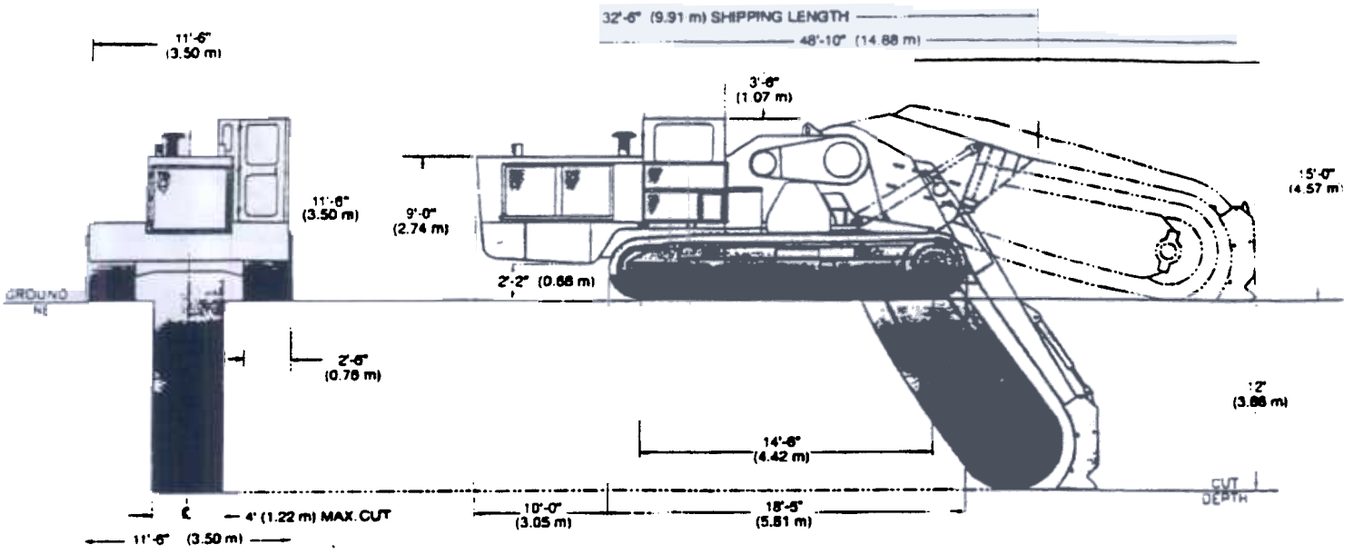

APPROXIMATE WEIGHT

160,000 - 185,000 lbs. (72,000 - 84,000 kg)

DIGGING CAPACITY

Boom lengths from 8 feet (2.4 m) through 18 feet (5.5 m), trench widths from 14" (35 cm) through 48" (122 cm). Maximums are 42" (106 cm) at 18 feet (5.5 m) and 48" (122 cm) through 16 feet (4.9 m).

POWER UNIT

Caterpillar® model 3408E, or Cummins® model QSK19 diesel engine, rated 600 hp (447 kw) @ 2,100 rpm. Adequate cooling capacity for 125 degree ambient temperature operation and two-stage air cleaner system.

CRAWLERS

Caterpillar®-type, D-7 components with 30" (76 cm) low profile, triple grouser shoes. Crawler rollers are oil filled and sealed. Caterpillar® crawler idler/recoil assembly with double springs. Each crawler is removable to facilitate transport.

CRAWLER DRIVE AND STEERING

Infinitely variable hydrostatic/mechanical system for speeds from 0 to 1 mph (1.6 km/h). Separate hydrostatic transmission for each track. Tracks may be counter-rotated for good maneuverability. Easily adapted to automatic steering system, either laser or stringline. Steering is electric over hydraulic for excellent control.

FUEL TANKS

Dual tanks - 350 gallon (1300 L) total capacity.

HYDRAULIC RESERVOIR

184 gallon (670 L) capacity.

OPERATOR'S CAB

Fully enclosed, air-conditioned & heated, with all machine controls within easy reach of the operator. Elevates hydraulically 44" (112 cm) for increased operator visibility.

DIGGING CHAIN DRIVE

The headshaft is driven from both sides by a two-stage roller chain arrangement, directly behind a heavy-duty Caterpillar® differential, which is powered by Allison® power shift transmission with an integral three element torque converter. Four digging chain speeds are available to suit varied digging conditions. All shafts, chains and bearings are designed to accommodate the full output of the torque converter and transmission in the stall condition. Roller chain tension is adjustable for both stages with eccentric hubs. All drive chains and sprockets are fully enclosed and oil bath lubricated.

DIGGING CHAIN

Heavy-duty roller type chain with T1 steel base plates and Trencor heavy-duty tooth blocks.

TAILWHEEL

48" (122 cm) diameter tailwheel mounted on heavy-duty roller type bearings.

CONVEYOR

Arc type 36" (91 cm) wide center guided conveyor hydraulically driven from both ends. Speed is infinitely variable from 0 to 870 fpm (265 m/min). Conveyor is hydraulically shiftable from side to side and is reversible in direction. An automatically engaged anti-drift brake is provided on the shift mechanism.

BOOM HOIST

Boom is elevated by dual hydraulic cylinders mounted to the substructure. The hoist provides positive down-crowd, and adequate tailwheel clearance.

DIGGING BOOM

Various booms are available depending on width selection:

14" through 18" (36 - 46 cm) – single chain arrangement
24" through 42" (46 - 107 cm) – double chain arrangement
42" through 48" (107 - 122 cm) – triple chain arrangement.

Boom can be sectionalized to adjust overall maximum digging depth to optimum length for maximum efficiency.

OPTIONAL AND EXTRA EQUIPMENT

- Automatic laser control for grade
- Automatic laser control for steering
- Work lights
- Hydraulic stabilizer / weight transfer
- RoadMiner® attachment 12'-8" (2.44 m) width x 4' (1.2 m) depth
- Various types and widths of track pads.

TRENCOR Inc.

1400 East Highway 26, Grapevine, Texas 76051, USA
(817) 421-4500 • 800 527-6020 • Fax (817) 421-9485
www.trencor.com

NOTE: Specifications m[illegible] change

MODEL 1660HD SPECIFICATIONS

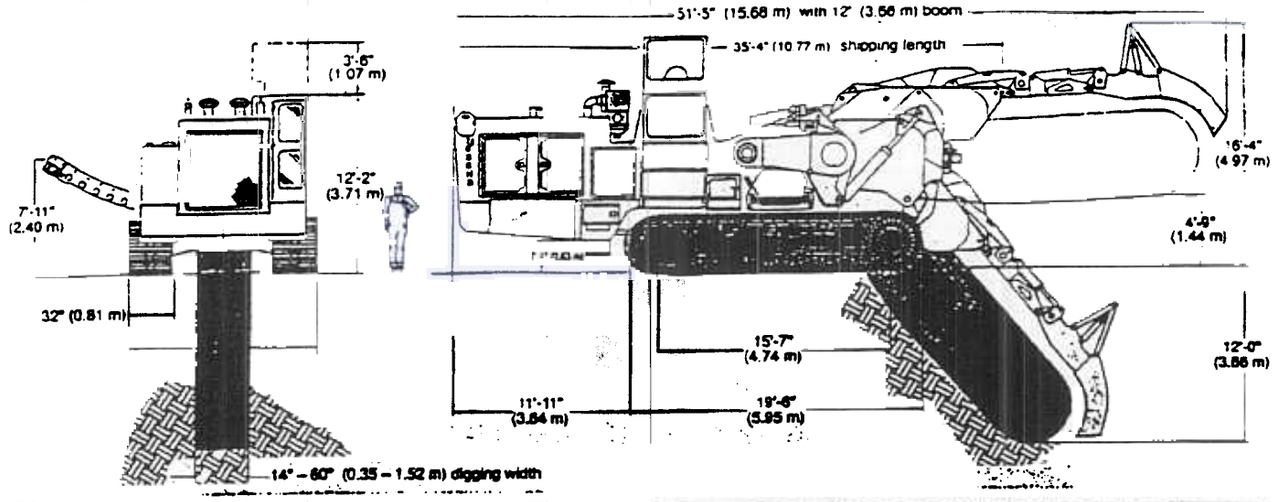

APPROXIMATE WEIGHT

215,000 - 250,000 lbs. (98,000 - 113,000 kg)

DIGGING CAPACITY

Boom lengths from 8 feet (2.4 m) through 25 feet (7.6 m), trench widths from 14" (35 cm) through 60" (152 cm). Maximums are 48" (122 cm) wide through 25' (7.6 m) and 60" (152 cm) through 20' (6.1m).

POWER UNIT

Caterpillar® model 3412 DITA diesel engine, rated 750 hp (559 kw) @ 2,100 rpm. Adequate cooling capacity for 120 degree ambient temperature operation and two-stage air cleaner system. 24-volt electric start; muffler; and tachometer. Includes engine driven air compressor. Fuel consumption 38 gallons (146 L) per hour.

FUEL TANKS

Dual tanks - 520 gallons (1,970 L) total capacity.

HYDRAULIC RESERVOIR

330 gallons (1,250 L) capacity.

OPERATOR'S CAB

Fully enclosed & heated, with all machine controls within easy reach of the operator. Elevates hydraulically 44" (112 cm) for increased operator visibility.

CRAWLERS

Caterpillar® D-8K components with 32" (81 cm) low profile, triple grouser shoes. Crawler rollers are oil filled and sealed. Crawler idler/recoil assembly is Caterpillar® type with double springs. Each crawler is removable to facilitate transport.

CRAWLER DRIVE AND STEERING

Hydrostatic/mechanical with 2 ranges for infinitely variable speeds from 0 to 1 mph (1.6 km/h). Each crawler is independently driven. Steering is electric over hydraulic for excellent control.

CONVEYOR

Arc type with 42" (107 cm) wide, center guided belt, hydrostatically driven in an infinite range of speeds from 0 to 980 fpm (300 m/min). Belt direction is reversible, and the conveyor frame is hydraulically shiftable left or right, from operator's position to provide precise spoil placement selection on either side of trench. End sections fold up for transport.

COUNTERWEIGHT

Hydraulically extendable counterweight is provided for increased stability when machine is walking.

BOOM HOIST

Dual double-acting, 12" (30.5 cm) bore, trunnion mounted hydraulic cylinders provide boom hoist control, positive down-crowd, and adequate rail wheel clearance.

DIGGING ASSEMBLY DRIVE

The 11.2" (28.4 cm) headshaft is driven from both sides by a two-stage roller chain arrangement, directly behind a heavy-duty Caterpillar® differential, which is powered by Allison® power shift transmission with an integral three element torque convertor. Four digging chain speeds are available to suit varied digging conditions. All shafts, chains and bearings are designed to accommodate the full output of the torque convertor and transmission in the stall condition (approx. 2.3 times normal operation torque). Roller chain tension is adjustable for both stages with eccentric hubs. All drive chains and sprockets are fully enclosed and oil bath lubricated.

DIGGING CHAIN

Caterpillar® digging chains: D-8 size for single and D-7 size for double chain applications. Boom furnished with hydro-adjusters to maintain proper chain adjustment.

CUTTER BAR PLATES

Rectangular steel plates of varying widths and thicknesses to which tooth holders are welded to accept rotating, conical, carbide tipped digging teeth. Plates are bolted to digging chain.

TAILWHEELS

48" (122 cm) diameter with heavy-duty seals, bearings.

WEAR PLATES

Boom equipped with replaceable, abrasive resistant wear plates on top and bottom.

DIGGING CHAIN CARRIER ROLLERS

Top of boom equipped with carrier rollers to reduce chain drag and assist chain in shedding excavated material.

DIGGING BOOM

Four sizes of booms are supplied depending on digging width selections:

14" through 18" (36 - 46 cm)	– single chain arrangement
24" through 42" (46 - 107 cm)	– double chain arrangement
32" through 48" (81 - 122 cm)	– double chain arrangement
48" through 60" (122 - 152 cm)	– triple chain arrangement.

Boom can be sectionalized to adjust overall maximum digging depth to optimum length for maximum efficiency.

OPTIONAL AND EXTRA EQUIPMENT

- Hydraulic fold-up crumber
- Weight Transfer system
- Automatic self-leveling and / or lateral slope control
- Automatic laser control for grade
- Automatic stringline control for grade and / or steering
- RoadMiner® attachment 12'-8" (2.44 m) width x 5' (1.5 m) depth
- Various types and widths of track pads