APPENDIX C

TYPICAL RIGHT-OF-WAY CROSS-SECTIONS

TABLE C1

Milepost Locations of Typical Right-of-Way Cross Sections Adjacent to Existing Right-of-Way

Cross Section	Mileposts	County	Length (mi)	Owner of Parallel Right-of-way	Overlap Dimensions a/ A	B	C	D
A-1077	37.2 - 39.8	Chautauqua	2.6	Niagara Mohawk	50	175	75	75
A-1075	41.7 - 43.9	Chautauqua	2.2	Columbia	50	50	25	75
A-1079	44.7 - 47.5	Chautauqua	2.8	Niagara Mohawk/Tennessee	50	125	75	75
A-1075	47.5 - 71.8	Chautauqua	24.3	Columbia	50	50	25	75
A-1075	71.9 - 88.0	Chautauqua/Cattaraugus	16.1	Columbia	50	50	25	75
A-1076	100.9 - 104.4	Cattaraugus	3.5	Buckeye	50	NA	0	75
A-1076	107.7 - 109.5	Cattaraugus	1.8	Columbia	50	NA	0	75
A-1077	109.5 - 111.9	Cattaraugus	2.4	Niagara Mohawk	50	100	75	75
A-1076	111.9 - 131.9	Cattaraugus/Allegany	20.0	Vandermark Exploration	50	NA	0	75
A-1076	132.0 - 133.3	Allegany	1.3	Columbia	50	NA	0	75
A-1077	133.3 - 143.0	Allegany	9.7	Niagara Mohawk	50	100	75	75
A-1075	147.7 - 157.1	Allegany/Steuben	9.4	Columbia	50	50	25	75
A-1079	157.3 - 157.9	Steuben	0.6	Columbia/Tennessee	50	75	25	75
A-1075	157.9 - 195.9	Steuben/Chemung	38.0	Columbia	50	50	25	75
A-1077	197.8 - 203.6	Chemung	5.8	NYSEG	50	125	25	75
A-1075	203.6 - 232.2	Chemung/Tioga	28.6	Columbia	50	50	25	75
A-1078	232.2 - 243.5	Tioga/Broome	11.3	NYSEG	50	250	50	75
A-1075	243.5 - 284.4	Broome	40.9	Columbia	50	50	25	75
A-1075	244.9 - 245.7	Broome		NYSEG	50	125	25	75
A-1075	284.4 - 284.7	Broome/Delaware	0.3	NYSEG	50	125	50	75
A-1076	285.6 - 376.4	Delaware/Sullivan/Orange	90.8	Columbia	50	NA	NA	75
A-1077	331.0 - 335.6	Orange		Orange & Rockland	50	100	150	75
A-1081	383.3 - 383.5	Rockland	0.2	Red Rock Road c/	NA	35	NA	35
A-1079	383.5 - 387.5	Rockland	4.0	Orange & Rockland Utilities	50	250	35	75
A-1077	391.6 - 399.1	Westchester	7.5	Consolidated Edison	50	400	50	75
A-1078	399.4 - 405.1	Westchester	5.7	Consolidated Edison	50	400	85-90	200
A-1082	405.1 - 408.7	Westchester	3.6	New DOT/Bike Trail	50	100	5	100
A-1078	408.0 - 417.3	Westchester	8.6	Consolidated Edison	50	200	40	200
A-1080	417.3 - 418.5	Westchester	1.2	Sprain Brook Parkway	50	150	25	75
A-1081	418.5 - 419.0	Westchester	0.5	Palmer Road c/	NA	35	NA	25
A-1080	419.0 - 419.3	Westchester	0.3	Sprain Brook Parkway	50	150	25	75
A-1081	419.3 - 420.2	Westchester	0.9	Midland Avenue c/	NA	65	NA	35
A-1081	420.2 - 420.5	Westchester	0.3	Bronx River Road c/	NA	65	NA	35
A-1080	420.5 - 420.9	Westchester	0.4	Bronx River Parkway	50	350-700	25	75
A-1081	420.9 - 421.2	Westchester	0.3	Mac Questin Parkway c/	NA	35	NA	25
A-1081	421.2 - 421.4	Westchester	0.2	Oak Street c/	NA	50	NA	20
A-1081	421.4 - 421.5	Westchester	0.1	Lincoln Avenue c/	NA	Varies	NA	35
A-1081	421.5 - 421.7	Westchester	0.2	Valentine Street c/	NA	50	NA	20
A-1081	421.7 - 421.7	Westchester	0.0	North Roosevelt c/	NA	60	NA	30
A-1081	421.8 - 422.3	Westchester	0.5	South 7th Street c/	NA	60	NA	35
A-1081	422.3 - 422.4	Westchester	0.1	West 4th Street c/	NA	60	NA	20
			347.0					

a/ A = Permanent right-of-way for proposed pipeline.
B = Existing pipeline, powerline, road, railroad, or bicycle right-of-way.
C = Distance between existing utility and proposed pipeline.
D = Nominal construction right-of-way.

b/ Existing pipeline to be removed and replaced by proposed pipeline.

c/ Spoil will be stored in front of or behind equipment, or removed from street.

TABLE C2

Milepost Locations of Where the Pipeline Would be on New Right-of-Way

Mileposts	County	Length (mi)
32.9 - 37.2	Chautauqua	4.5
39.8 - 41.7	Chautauqua	2.0
43.9 - 44.7	Chautauqua	0.8
71.8 - 71.9	Chautauqua	0.1
88.0 - 100.9	Cattaraugus	13.6
104.4 - 107.7	Cattaraugus	3.5
131.9 - 132.0	Allegany	0.1
143.0 - 147.7	Allegany	5.1
157.1 - 157.3	Steuben	0.2
195.9 - 197.8	Chemung	2.0
284.7 285.6	Delaware	0.9
387.5 - 391.6	Rockland	4.3
399.1 - 399.4	Westchester	0.3
		37.4

TABLE C3

Milepost Locations Where the Pipeline Would be More than 25 feet from the Existing Pipeline

Beginning MP	Ending MP	Length (mi)	Reason
46.46	46.82	0.36	Portage Road crossing
48.98	49.28	0.30	Avoid encroachment into NYSDEC Wetland HF-2
49.43	49.79	0.36	Elm Flats Road crossing
50.34	50.38	0.04	Trib. Big Inlet Creek crossing
52.09	52.26	0.17	Dewittville Creek crossing
54.38	54.47	0.09	Bayview Road crossing
55.63	55.68	0.05	Bemus Creek crossing
59.88	59.94	0.06	Cassadaga Creek crossing
60.31	60.37	0.06	Trib. Cassadaga Creek crossing
60.48	60.58	0.10	Trib. Cassadaga Creek crossing
66.70	66.74	0.04	Trib. Clear Creek crossing
68.80	69.04	0.24	Clear Creek crossing
69.13	69.18	0.05	Trib. Clear Creek crossing
72.83	72.88	0.05	State Drainage Ditch crossing
72.95	72.98	0.03	Trib. State Drainage Ditch crossing
72.98	73.01	0.03	Trib. State Drainage Ditch crossing
75.90	76.26	0.36	Landowner request
80.18	80.22	0.04	Peaslee Hollow crossing
81.57	81.62	0.05	Trib. Cold Spring Creek crossing
84.28	84.32	0.04	Trib. Little Valley Creek crossing
155.05	155.19	0.14	Bennetts Creek and Trib. Bennetts Creek crossings
157.12	157.35	0.23	Avoid residence
157.41	157.57	0.16	Side slope construction
165.37	165.41	0.04	North Branch Tuscarora Creek crossing
167.00	167.04	0.04	Trib. Tracey Creek crossing
171.48	171.57	0.09	Canisteo River crossing
173.61	173.73	0.12	Goodhue Creek and Wetland W221/NYSDEC Wetland RB-8 crossings
176.68	176.77	0.09	Wetland W227/NYSDEC Wetland CB-4 crossing
178.09	178.26	0.17	Curtis Creek and Curtis Hollow Road crossing
180.30	180.63	0.33	Wetland W235 crossing
180.94	180.98	0.04	Trib. Cohocton River crossing
181.28	181.55	0.27	Cohocton River crossing
183.94	183.98	0.04	Erin Brook and Wetland W239 crossings
185.07	185.20	0.13	Hodgmans Creek and Wetland W240 crossings
186.64	186.70	0.06	Cutler Creek crossing
187.43	187.64	0.21	Avoid existing valve location
188.60	188.66	0.06	Post Creek crossing
190.52	190.63	0.11	Corning Compressor Station
191.83	191.96	0.13	Eacher Hollow Road crossing
192.97	193.02	0.05	Trib. Guthrie Run crossing
193.53	193.57	0.04	Trib. Guthrie Run crossing
195.47	195.66	0.19	Sing Sing Creek crossing
209.85	209.91	0.06	Trib. Newtown Creek crossing
214.93	214.99	0.06	Cayuta Creek crossing
220.44	220.48	0.04	South Branch Catatonk Creek crossing
221.37	221.43	0.06	Trib. South Branch Catatonk Creek crossing
223.07	223.13	0.06	Evelin Hill Creek crossing
224.52	224.57	0.05	Pipe Creek crossing
228.07	228.39	0.32	Catatonk Creek and State Route 96 crossing
228.89	229.04	0.15	Trib. Catatonk Creek crossing
230.06	230.18	0.12	Trib. Owego Creek crossing
230.25	230.38	0.13	Owego Creek crossing
231.12	231.16	0.04	Trib. Owego Creek crossing
244.13	244.20	0.07	Patterson Creek crossing

TABLE C3 (cont'd)

Beginning MP	Ending MP	Length (mi)	Reason
244.93	244.97	0.04	Trib. Little Choconut Creek crossing
246.92	247.19	0.27	Little Choconut Creek and County Route 69 crossing
247.23	247.27	0.04	Trib. Little Choconut Creek crossing
251.61	251.81	0.20	Wetlands W416 and W417 crossings
251.93	252.17	0.24	Wetland W418 crossing
252.59	252.79	0.20	Wetland W419 and County Route 68 crossings
253.15	253.52	0.37	Wetland W420 and Trib. Stratton Mill Creek crossings
254.75	254.85	0.10	Trib. Stanley Hollow Creek crossing
255.65	255.73	0.08	Duell Road crossing
255.78	255.82	0.04	Trib. Stanley Hollow Creek crossing
260.13	260.21	0.08	Wetland W436 crossing
260.49	260.65	0.16	Trib. Still Creek crossing
263.02	263.32	0.30	State Route 79 and Susquehanna River crossing
264.53	264.55	0.02	Trib. Susquehanna River crossing
271.85	272.48	0.63	Side slope construction, Wetland W464, Trib. Oquaga Creek, and Oquaga Creek crossings
274.76	274.99	0.23	Wetlands W468 and W469 crossings
276.88	277.19	0.31	Landowner request
277.19	277.61	0.42	Landowner request
277.63	277.76	0.13	Landowner request
279.34	279.39	0.05	Trib. Roods Creek crossing
281.54	281.61	0.07	Avoid residence
284.85	284.90	0.05	Sands Creek crossing
TOTAL	**76 locations**	**10.45 mi**	

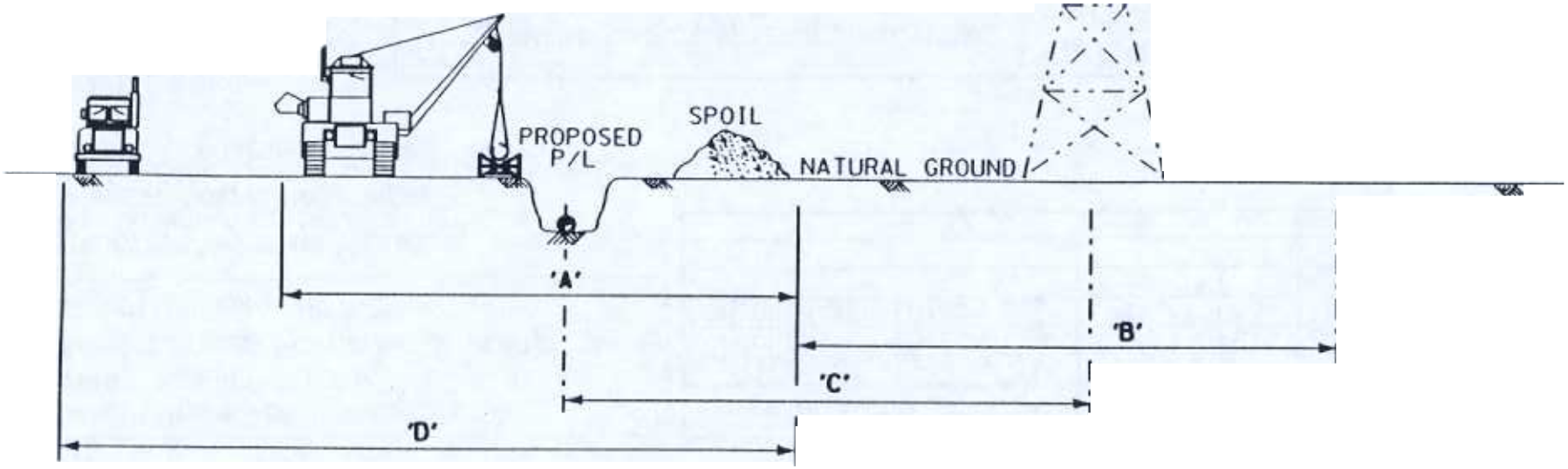

R.O.W. CROSS SECTION

NOTE: AN ADDITIONAL 25 FEET OF TEMPORARY CONSTRUCTION R.O.W. WILL BE UTILIZED IN CROPLANDS FOR TOPSOIL CONSERVATION.

'A' = PERMANENT R.O.W. FOR PROPOSED LINE
'B' = EXISTING POWERLINE R.O.W.
'C' = DISTANCE BETWEEN POWERLINE & PROPOSED P/L
'D' = CONSTRUCTION WORK AREA

OWNER OF PARALLEL R.O.W.	APPROXIMATE MILEPOSTS	DIMENSIONS			
		'A'	'B'	'C'	'D'
NIAGARA MOHAWK POWER CORP.	37.2-39.8	50'	175'	75'	75'
NIAGARA MOHAWK POWER CORP.	109.5-111.9	50'	100'	75'	75'
NIAGARA MOHAWK POWER CORP.	133.3-143.0	50'	100'	75'	75'
NY STATE ELECTRIC & GAS	197.8-203.6	50'	125'	25'	75'
CONSOLIDATED EDISON CORP.	391.6-399.1	50'	400'	50'	75'

LEGEND

EXISTING POWER TOWER
PROPOSED PIPELINE
EXISTING PIPELINE
R.O.W. RIGHT-OF-WAY

FLUOR DANIEL WILLIAMS BROTHERS

MILLENNIUM PIPELINE

TYPICAL RIGHT-OF-WAY CROSS SECTION
PROPOSED PIPELINE ADJACENT TO
EXISTING POWERLINE

Date 9-21-98
Approved

ST-8525-000-A-1077
REV

WORKING COPY: U' \852510\0001078.DGN DATE: FRI MAR 5 10:59:15 1999 BY: LACK868P

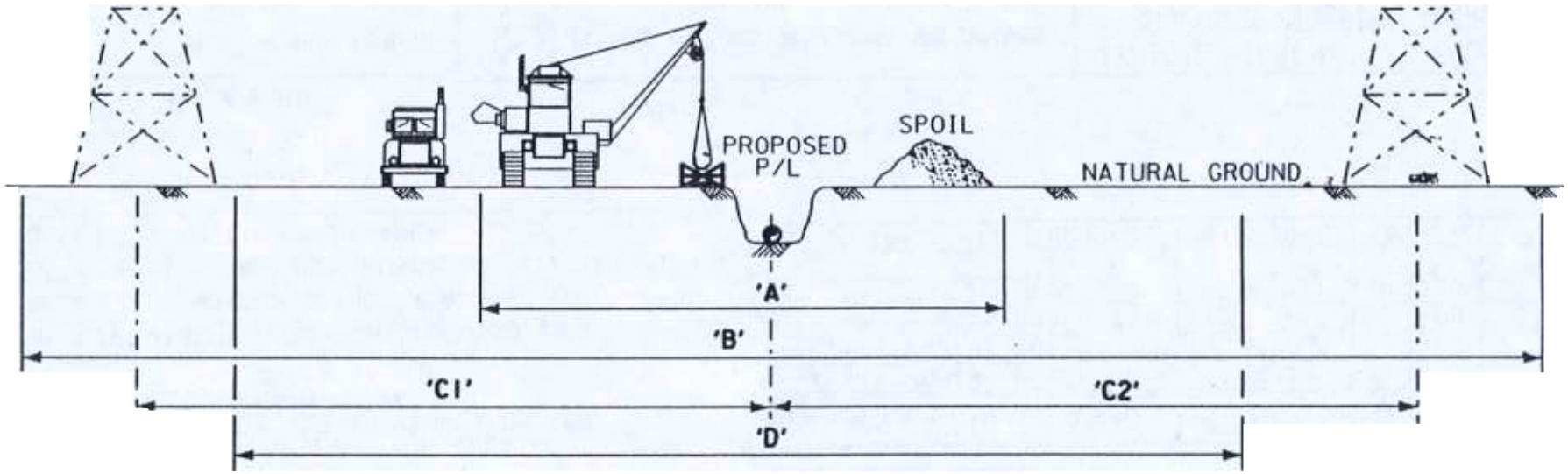

R.O.W. CROSS SECTION

'A' = PERMANENT R.O.W. FOR PROPOSED LINE
'B' = EXISTING POWERLINE R.O.W.
'C' = DISTANCE BETWEEN POWERLINE & PROPOSED P/L
'D' = CONSTRUCTION WORK AREA

NOTE: CONSTRUCTION WORK AREA LIMITS, 'D', MAY EXCEED THE DISTANCE BETWEEN THE NEAREST POWERLINE TOWERS, BUT IN NO CASE EXCEED THE LIMITS OF THE EXISTING POWERLINE R.O.W.

OWNER OF PARALLEL R.O.W.	APPROXIMATE MILEPOSTS	DIMENSIONS				
		'A'	'B'	'C1'	'C2'	'D'
NEW YORK ST. ELECT. & GAS	232.2-243.5	50'	250'	50'	50'	75'
CONSOLIDATED EDISON CORP.	399.4-405.1	50'	400'	90'	85'	200'
CONSOLIDATED EDISON CORP.	408.0-417.3	50'	200'	40'	40'	200'

LEGEND

EXISTING POWER TOWER
PROPOSED PIPELINE
EXISTING PIPELINE
R.O.W. RIGHT-OF-WAY

FLUOR DANIEL WILLIAMS BROTHERS

MILLENNIUM PIPELINE

TYPICAL RIGHT-OF-WAY CROSS SECTION
PROPOSED PIPELINE ADJACENT TO
MULTIPLE EXISTING POWERLINES

Date 9-21-98
Approved

ST-8525-000-A-1078
REV. 2

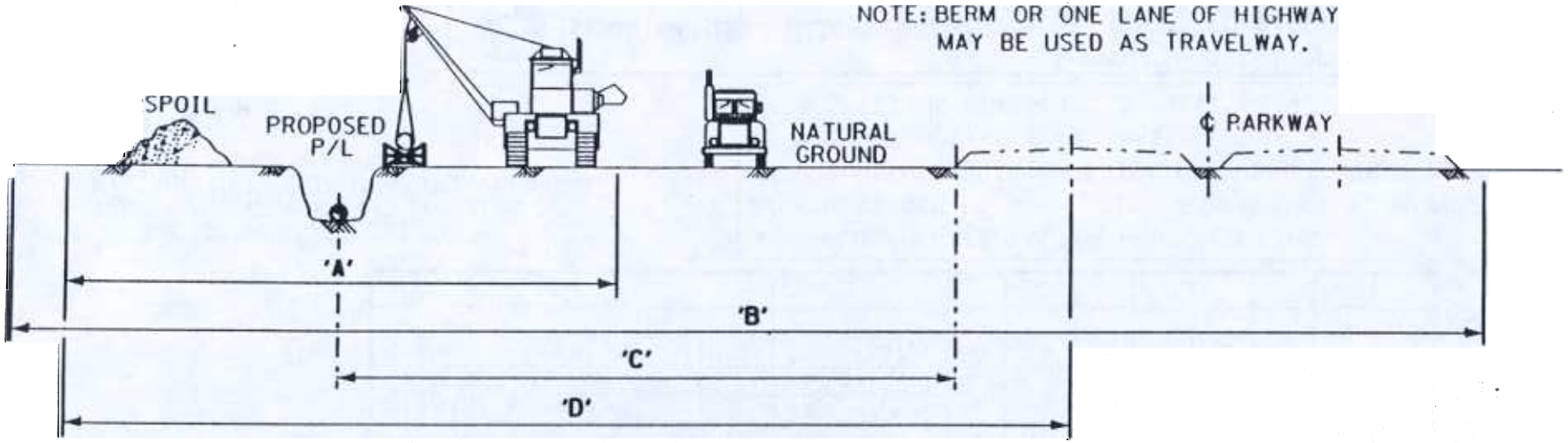

R.O.W. CROSS SECTION

OWNER OF PARALLEL R.O.W.	PARKWAY NAME	APPROXIMATE MILEPOSTS	DIMENSIONS			
			'A'	'B'	'C'	'D'
NEW YORK DEPT. OF TRANS.	SPRAIN BROOK	417.3-418.5	50'	150'	25'	75'
NEW YORK DEPT. OF TRANS.	SPRAIN BROOK	419.0-419.3	50'	150'	25'	75'
NEW YORK DEPT. OF TRANS.	BRONX RIVER*	420.5-420.9	50'	550'	25'	75'

'A' = PERMANENT R.O.W. FOR PROPOSED LINE
'B' = EXISTING PARKWAY R.O.W.
'C' = DISTANCE BETWEEN SHOULDER & PROPOSED P/L
'D' = CONSTRUCTION WORK AREA

* PARKWAY WIDTH VARIES FROM APPROXIMATELY 350' TO 700' IN THIS VICINITY.

LEGEND

● PROPOSED PIPELINE

R.O.W. RIGHT-OF-WAY

FLUOR DANIEL WILLIAMS BROTHERS

MILLENNIUM PIPELINE

TYPICAL RIGHT-OF-WAY CROSS SECTION PROPOSED PIPELINE ADJACENT TO EXISTING ROAD

Date 9-21-98

Approved

ST-8525-000-A-1080

WORKING COPY: N: 52510\0001079.DGN DATE: THU JAN 7 14:36:52 1999 BY: HANS7722

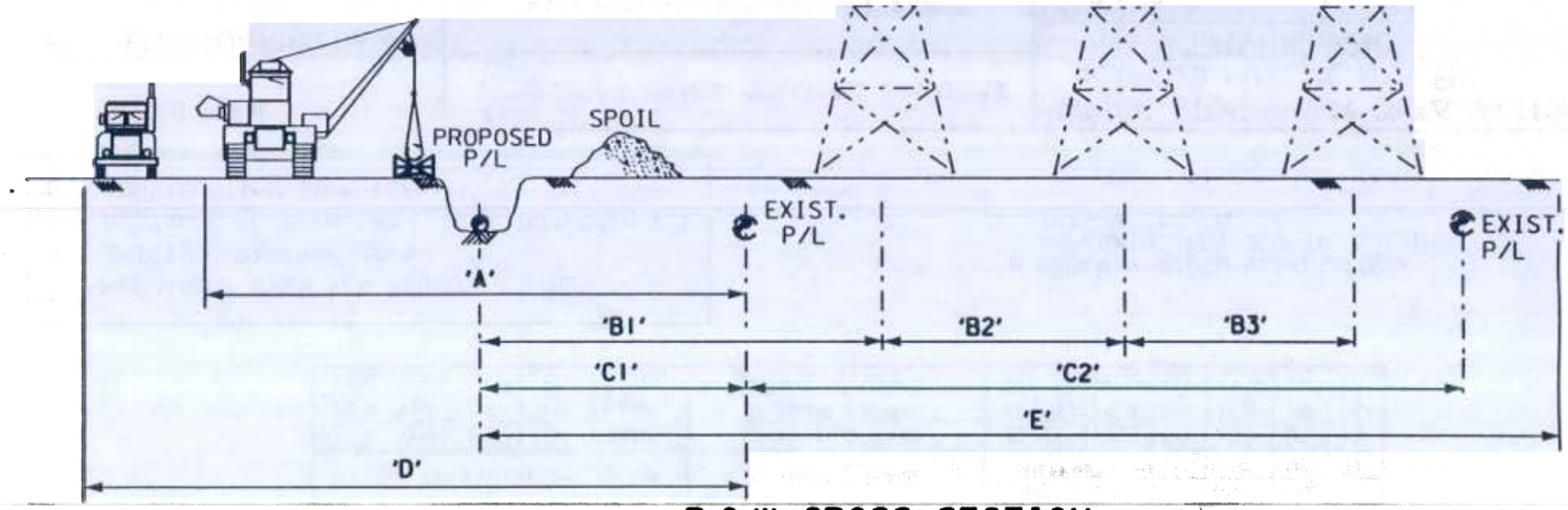

R.O.W. CROSS SECTION

OWNER OF PARALLEL R.O.W.	APPROXIMATE MILEPOSTS	DIMENSIONS							
		'A'	'B1'	'B2'	'B3'	'C1'	'C2'	'D'	'E'
NIAGARA MOHAWK/TENN. GAS	44.7-47.5	50'	75'	N/A	N/A	25'	25'	75'	125'
COLUMBIA/TENNESSEE GAS	157.3-157.9	50'	N/A	N/A	N/A	25'	25'	75'	75'
ORANGE & ROCKLAND UTIL'S.	383.5-387.5	50'	75'	35'	40'	200'	N/A	75'	250'

NOTE: AN ADDITIONAL 25 FEET OF TEMPORARY CONSTRUCTION R.O.W. WILL BE UTILIZED IN CROPLANDS FOR TOPSOIL CONSERVATION.

'A' = PERMANENT R.O.W. FOR PROPOSED LINE
'B' = DISTANCE BETWEEN EXIST. POWERLINES & PROPOSED P/L
'C' = DISTANCE BETWEEN EXISTING P/L(S) & PROPOSED P/L
'D' = CONSTRUCTION WORK AREA
'E' = EXISTING POWERLINE & PIPELINE R.O.W.

LEGEND

- EXISTING POWER TOWER
- PROPOSED PIPELINE
- EXISTING PIPELINE
- P/L PIPELINE
- R.O.W. RIGHT-OF-WAY

FLUOR DANIEL WILLIAMS BROTHERS

MILLENNIUM PIPELINE

TYPICAL RIGHT-OF-WAY CROSS SECTION PROPOSED PIPELINE ADJACENT TO EXIST. PIPELINE(S)/POWERLINE(S)

Date 9-21-98

Approved

ST-8525-000-A-1079
REV. 2

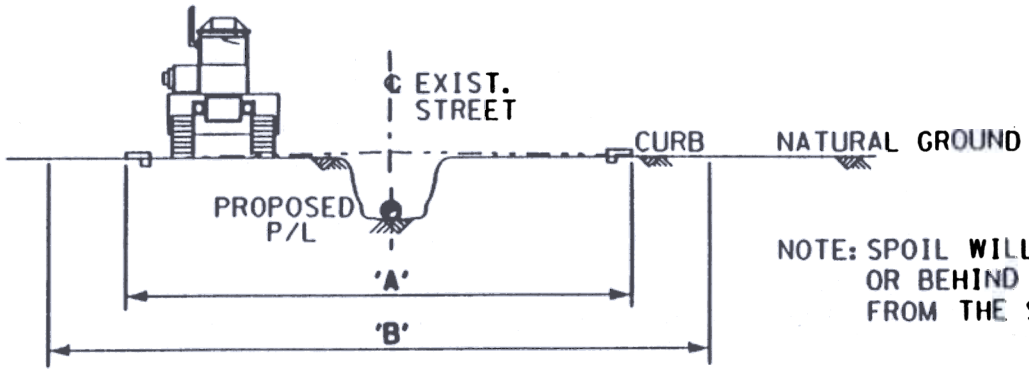

NOTE: SPOIL WILL BE STORED IN FRONT OF OR BEHIND EQUIPMENT, OR REMOVED FROM THE STREET.

R.O.W. CROSS SECTION

'A' = CONSTRUCTION WORK AREA

'B' = EXISTING STREET R.O.W. AND UTILITIES

OWNER OF PARALLEL R.O.W.	STREET NAME	APPROXIMATE MILEPOSTS	DIMENSIONS	
			'A'	'B'
TOWN OF CLARKSTON	RED ROCK ROAD	383.3-383.5	35'	35'
CITY OF YONKERS	PALMER ROAD	418.5-419.0	25'	35'
CITY OF YONKERS	MIDLAND AVENUE	419.3-420.2	35'	65'
CITY OF YONKERS	BRONX RIVER ROAD	420.2-420.5	35'	65'
TOWN OF MT VERNON	MAC QUESTIN PK'WY	420.9-421.2	25'	35'
TOWN OF MT VERNON	OAK STREET	421.2-421.4	20'	50'
TOWN OF MT VERNON	LINCOLN AVENUE	421.4-421.5	34'	VARIES
TOWN OF MT VERNON	VALENTINE STREET	421.5-421.7	20'	50'
TOWN OF MT VERNON	NORTH ROOSEVELT	421.7-421.7	30'	60'
TOWN OF MT VERNON	SOUTH 7TH STREET	421.8-422.3	35'	60'
TOWN OF MT VERNON	WEST 4TH STREET	422.3-422.4	20'	60'

LEGEND

● PROPOSED PIPELINE

R.O.W. RIGHT-OF-WAY

FLUOR DANIEL WILLIAMS BROTHERS

MILLENNIUM PIPELINE

TYPICAL RIGHT-OF-WAY CROSS SECTION
PROPOSED PIPELINE WITHIN
CITY STREET

Date 9-21-98

Approved

ST-8525-000-A-1081

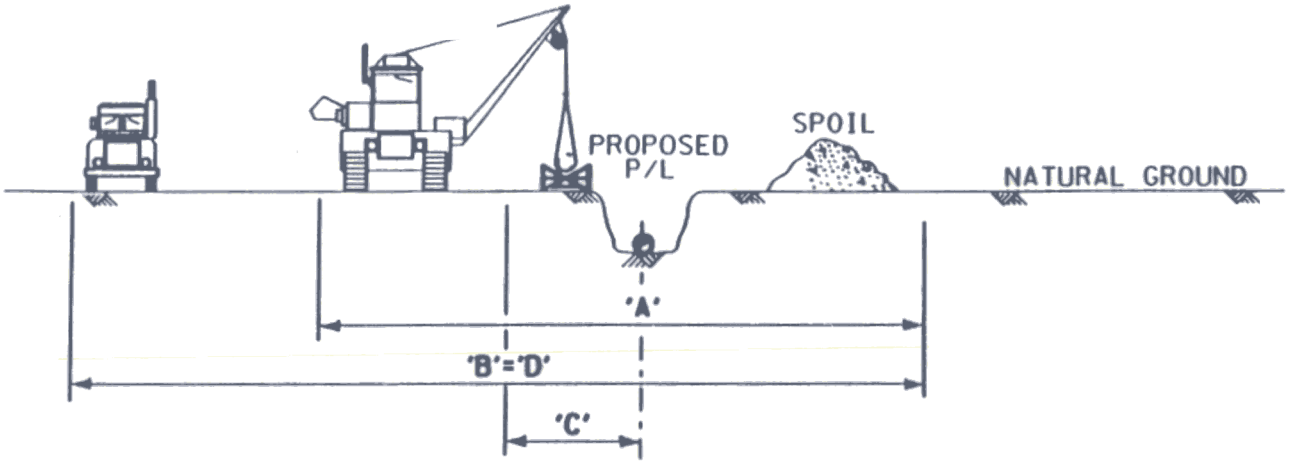

R.O.W. CROSS SECTION

OWNER OF PARALLEL R.O.W.	APPROXIMATE MILEPOSTS	DIMENSIONS			
		'A'	'B'	'C'	'D'
NEW YORK DOT (BIKE TRAIL)	405.1-408.7	50'	100'	5'	*

'A' = PERMANENT R.O.W. FOR PROPOSED LINE
'B' = EXISTING BIKE TRAIL R.O.W.
'C' = DISTANCE BETWEEN BIKE TRAIL & PROPOSED P/L
'D' = CONSTRUCTION WORK AREA

* CONSTRUCTION WORK AREA ENCOMPASSES BIKE TRAIL AREA.

LEGEND

● PROPOSED PIPELINE

R.O.W. RIGHT-OF-WAY

FLUOR DANIEL WILLIAMS BROTHERS

MILLENNIUM PIPELINE

TYPICAL RIGHT-OF-WAY CROSS SECTION
PROPOSED PIPELINE ADJACENT TO
BIKE TRAIL

Date 9-21-98

Approved

ST-8525-000-A-1082
REV. 1

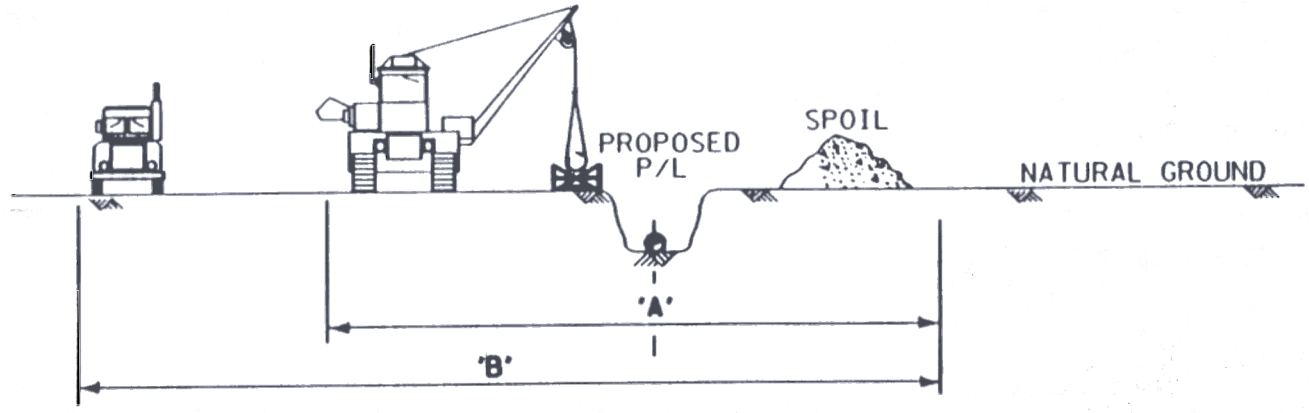

R.O.W. CROSS SECTION

NOTE: AN ADDITIONAL 25 FEET OF TEMPORARY CONSTRUCTION R.O.W. WILL BE UTILIZED IN CROPLANDS FOR TOPSOIL CONSERVATION.

'A' = PERMANENT R.O.W. FOR PROPOSED LINE
'B' = CONSTRUCTION WORK AREA

NOTE: EXISTING PIPELINE TO BE REMOVED AND REPLACED BY PROPOSED PIPELINE

OWNER OF R.O.W.	APPROXIMATE MILEPOSTS	DIMENSIONS 'A'	DIMENSIONS 'B'
BUCKEYE PIPELINE CORP.	100.9-104.4	50'	75'
COLUMBIA GAS TRANSMISSION	107.7-109.5	50'	75'
VANDERMARK EXPLORATION	111.9-131.9	50'	75'
COLUMBIA GAS TRANSMISSION	132.0-133.3	50'	75'
COLUMBIA GAS TRANSMISSION	285.6-376.7	50'	75'

LEGEND

● PROPOSED PIPELINE

R.O.W. RIGHT-OF-WAY

FLUOR DANIEL WILLIAMS BROTHERS

MILLENNIUM PIPELINE

TYPICAL RIGHT-OF-WAY CROSS SECTION
PROPOSED PIPELINE REPLACING
EXISTING PIPELINE

Date 9-21-98

Approved

ST-8525-000-A-1076

REV. 1

WORKING COPY: N:\11852518\0001075.DGN DATE: WED OCT 14 09:14:05 1998 BY: PFE19468

'A' = PERMANENT R.O.W. FOR PROPOSED LINE
'B' = EXISTING PIPELINE R.O.W.
'C' = DISTANCE BETWEEN EXIST. & PROPOSED LINES
'D' = CONSTRUCTION WORK AREA

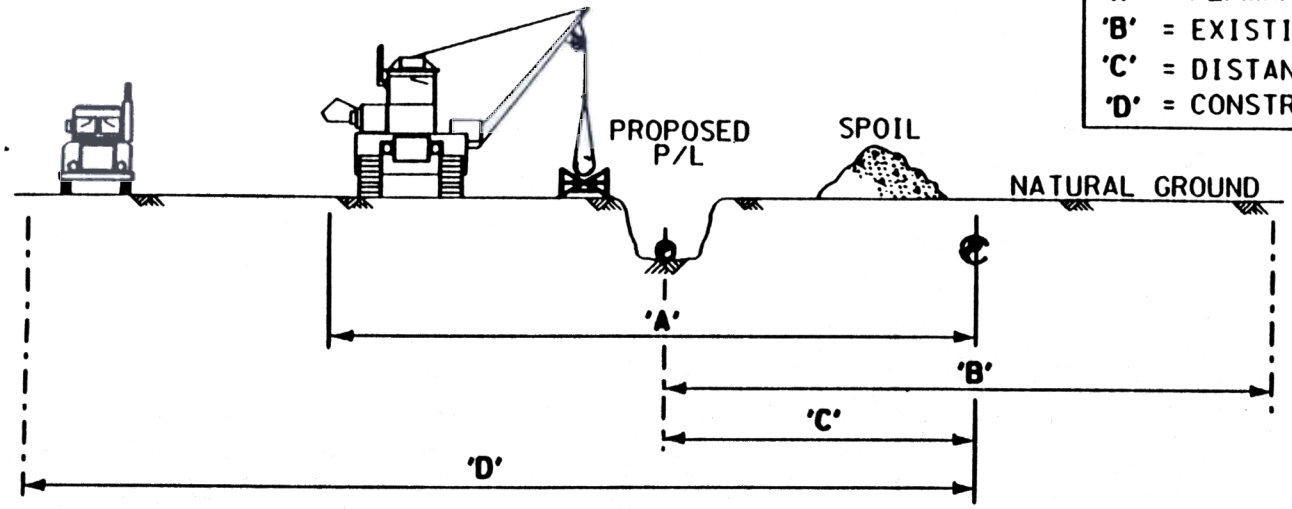

NOTE:
AN ADDITIONAL 25 FEET OF TEMPORARY CONSTRUCTION R.O.W. WILL BE UTILIZED IN CROPLANDS FOR TOPSOIL CONSERVATION.

R.O.W. CROSS SECTION

OWNER OF PARALLEL ROW	APPROXIMATE MILEPOSTS	DIMENSIONS 'A'	'B'	'C'	'D'
* COLUMBIA GAS TRANSMISSION	41.7-43.9	50'	50'	25'	75'
* COLUMBIA GAS TRANSMISSION	47.5-71.8	50'	50'	25'	75'
* COLUMBIA GAS TRANSMISSION	71.9-88.0	50'	50'	25'	75'

OWNER OF PARALLEL ROW	APPROXIMATE MILEPOSTS	DIMENSIONS 'A'	'B'	'C'	'D'
* COLUMBIA GAS TRANSMISSION	147.7-157.1	50'	50'	25'	75'
* COLUMBIA GAS TRANSMISSION	157.9-195.9	50'	50'	25'	75'
* COLUMBIA GAS TRANSMISSION	203.6-232.2	50'	50'	25'	75'
* COLUMBIA GAS TRANSMISSION	243.5-284.4	50'	50'	25'	75'
NY STATE ELECTRIC & GAS	244.9-245.7	50'	125'	25'	75'
NY STATE ELECTRIC & GAS	284.4-284.7	50'	125'	50'	75'

* PORTIONS OF THE EXISTING PIPELINE NOT CONTAINED IN THE PROPOSED PERMANENT R.O.W. WILL BE UTILIZED FOR EXCESS SPOIL & LIMITED CONSTRUCTION ACCESS.

LEGEND

- EXISTING POWER TOWER
- PROPOSED PIPELINE
- EXISTING PIPELINE
- R.O.W. RIGHT-OF-WAY

FLUOR DANIEL WILLIAMS BROTHERS

MILLENNIUM PIPELINE

TYPICAL RIGHT-OF-WAY CROSS SECTION PROPOSED PIPELINE ADJACENT TO EXISTING PIPELINE

Date 9-21-98
Approved

ST-8525-000-A-1075
REV.1

WORKING COPY: P:\8525\0001085.DGN DATE: FRI OCT 30 13:01:21 1998 BY: LACK868

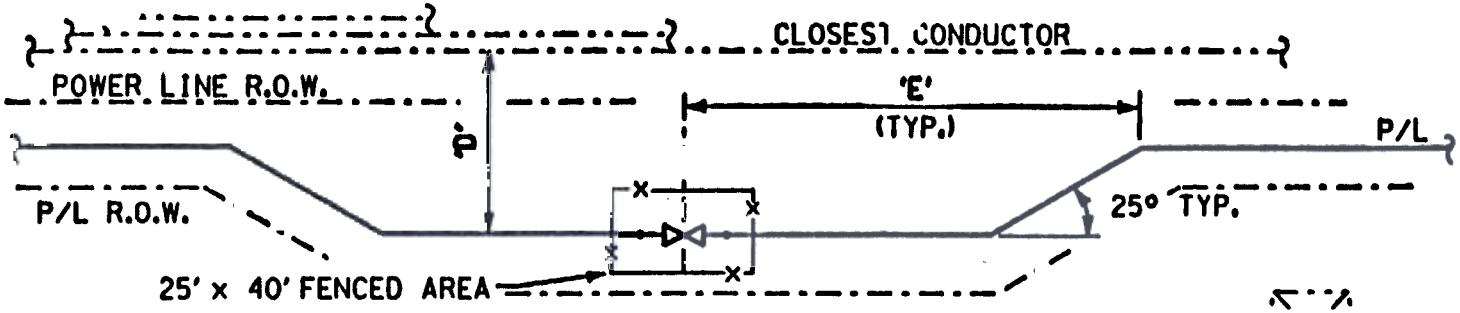

R.O.W. PLAN

TYP. OFFSET FROM PARALLEL POWER LINES

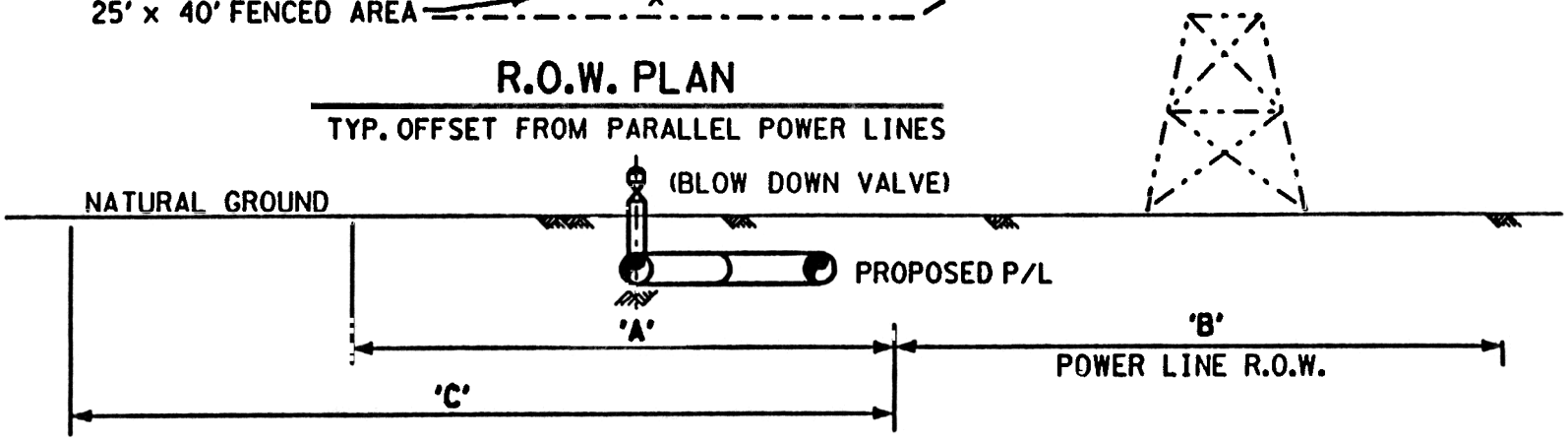

R.O.W. CROSS SECTION

'A' = PERMANENT R.O.W. FOR PROPOSED PIPELINE
'B' = EXISTING POWERLINE R.O.W.
'C' = CONSTRUCTION WORK AREA
'D' = DISTANCE BETWEEN P/L & CLOSEST CONDUCTOR
'E' = HALF LENGTH OF P/L OFFSET

OWNER OF PARALLEL R.O.W.	APPROXIMATE MILEPOSTS	DIMENSIONS				
		'A'	'B'	'C'	'D'	'E'
NIAGARA MOHAWK POWER CORP.	110.6	50'	100'	75'	100'	200'
N Y STATE ELECTRIC & GAS	241.3	50'	175'	75'	100'	200'
CONSOLIDATED EDISON CORP.	394.5	50'	400'	75'	100'	200'

LEGEND

P/L PIPELINE
EXISTING POWER TOWER
PROPOSED PIPELINE
R.O.W. RIGHT-OF-WAY

FLUOR DANIEL WILLIAMS BROTHERS

MILLENNIUM PIPELINE

TYPICAL RIGHT-OF-WAY DETAIL
PROPOSED PIPELINE BLOW DOWN
VALVE ADJACENT TO EXISTING POWERLINE

Date 10-29-98
Approved

ST-8525-000-A-1085
REV. 0

APPENDIX C-4

TYPICAL RIGHT-OF-WAY CROSS-SECTIONS

Cross-Section	Typical Right-of-Way Cross Section Description
A-1075	Proposed Pipeline Adjacent to Existing Pipeline
A-1076	Proposed Pipeline Replacing Existing Pipeline
A-1077	Proposed Pipeline Adjacent to Existing Powerline
A-1078	Proposed Pipeline Adjacent to Multiple Existing Powerlines
A-1079	Proposed Pipeline Adjacent to Existing Pipeline(s)/ Powerline(s)
A-1080	Proposed Pipeline Adjacent to Existing Road
A-1081	Proposed Pipeline Within City Street
A-1082	Proposed Pipeline Adjacent to Bike Trail
A-1085	Proposed Pipeline Blow Down Valve Adjacent to Existing Powerline