APPENDIX C

TYPICAL RIGHT-OF-WAY CROSS-SECTIONS

TABLE C1

Milepost Locations of Typical Right-of-Way Cross Sections

Cross Section	Mileposts	County	Owner of Parallel Right-of-way	Overlap Dimensions a/			
				A	B	C	D
--	32.9 - 37.2	Chautauqua	None	0	0	0	0
A-1077	37.2 - 39.8	Chautauqua	Niagara Mohawk	50	175	75	75
--	39.8 - 41.7	Chautauqua	None	0	0	0	0
A-1075	41.7 - 43.9	Chautauqua	Columbia	50	50	25	75
--	43.9 - 44.7	Chautauqua	None	0	0	0	0
A-1079	44.7 - 47.5	Chautauqua	Niagara Mohawk/Tennessee	50	125	75	75
A-1075	47.5 - 71.8	Chautauqua	Columbia	50	50	25	75
--	71.8 - 71.9	Chautauqua	None	0	0	0	0
A-1075	71.9 - 88.0	Chautauqua/Cattaraugus	Columbia	50	50	25	75
--	88.0 - 100.9	Cattaraugus	None	0	0	0	0
A-1076	100.9 - 104.4	Cattaraugus	Buckeye	50	NA	0	75
--	104.4 - 107.7	Cattaraugus	None	0	0	0	0
A-1076	107.7 - 109.5	Cattaraugus	Columbia	50	NA	0	75
A-1077	109.5 - 111.9	Cattaraugus	Niagara Mohawk	50	100	75	75
A-1076	111.9 - 131.9	Cattaraugus/Allegany	Vandermark Exploration	50	NA	0	75
--	131.9 - 132.0	Allegany	None	0	0	0	0
A-1076	132.0 - 133.3	Allegany	Columbia	50	NA	0	75
A-1077	133.3 - 143.0	Allegany	Niagara Mohawk	50	100	75	75
--	143.0 - 147.7	Allegany	None	0	0	0	0
A-1075	147.7 - 157.1	Allegany/Steuben	Columbia	50	50	25	75
--	157.1 - 157.3	Steuben	None	0	0	0	0
A-1079	157.3 - 157.9	Steuben	Columbia/Tennessee	50	75	25	75
A-1075	157.9 - 195.9	Steuben/Chemung	Columbia	50	50	25	75
--	195.9 - 197.8	Chemung	None	0	0	0	0
A-1077	197.8 - 203.6	Chemung	NYSEG	50	125	25	75
A-1075	203.6 - 232.2	Chemung/Tioga	Columbia	50	50	25	75
A-1078	232.2 - 243.5	Tioga/Broome	NYSEG	50	250	50	75
A-1075	243.5 - 284.4	Broome	Columbia	50	50	25	75
A-1075	244.9 - 245.7	Broome	NYSEG	50	125	25	75
A-1075	284.4 - 284.7	Broome/Delaware	NYSEG	50	125	50	75
--	284.7 - 285.6	Delaware	None	0	0	0	0
A-1076	285.6 - 376.4	Delaware/Sullivan/Orange	Columbia	50	NA	NA	75
A-1077	331.0 - 335.6	Orange	Orange & Rockland	50	100	150	75

TABLE C1 (cont'd)

Cross Section	Mileposts	County	Owner of Parallel Right-of-way	Overlap Dimensions a/ A	B	C	D
A-1081	383.3 - 383.5	Rockland	Red Rock Road c/	NA	35	NA	35
A-1079	383.5 - 387.5	Rockland	Orange & Rockland Utilities	50	250	35	75
--	387.5 - 391.2	Rockland	None	0	0	0	0
8525-CAD-5505	391.2 - 391.8	Westchester	New right-of-way	50	–	–	50-75
8525-CAD-5503	391.8 - 392.6	Westchester	NYS DOT - U.S. Route 9	50	185-300	5-50	20-35
8525-CAD-5504	392.6 - 392.7	Westchester	Public/Private Road - Watch Hill Road	50	50-100	15-25	35
8525-CAD-5505	392.7 - 392.9	Westchester	New right-of-way	50	–	–	75
8525-CAD-5503	392.9 - 394.2	Westchester	NYS DOT - U.S. Route 9 offramp	50	185-300	5-50	20-35
8525-CAD-5504	394.3 - 395.3	Westchester	Public/Private Road - NY Central Railroad	50	50-100	0-30	20-75
8525-CAD-5505	395.3 - 395.5	Westchester	New right-of-way	50	–	–	20
8525-CAD-5504	395.5 - 396.4	Westchester	Public/Private Road	50	50-100	0-50	25-50
8525-CAD-5505	396.4 - 396.6	Westchester	New right-of-way	50	–	–	25-75
8525-CAD-5504	396.9 - 397.0	Westchester	Public/Private Road - South Riverside Ave.	50	50-100	0-50	25
8525-CAD-5503	397.0 - 401.3	Westchester	NYS DOT - State Route 9A	50	200-360	5-50	15-75
8525-CAD-5505	401.3 - 401.6	Westchester	New right-of-way	50	–	–	50
8525-CAD-5503	401.6 - 404.0	Westchester	NYS DOT - U.S. Route 9/State Route 100/North	50	200-360	5-50	35
8525-CAD-5502	404.0 - 406.8	Westchester	NYS DOT - Briarcliff-Peekskill Trailway	50	100	5	25
8525-CAD-5505	406.8 - 407.1	Westchester	New right-of-way	50	–	–	75
8525-CAD-5504	407.1 - 407.4	Westchester	Public/Private Road - Old Saw Mill River Road	50	50-100	0-10	30
8525-CAD-5505	407.4 - 407.8	Westchester	New right-of-way	50	–	–	75
8525-CAD-5502	407.8 - 408.3	Westchester	NYS DOT - Abandoned railroad right-of-way	50	100	5	20-50
8525-CAD-5504	408.3 - 408.6	Westchester	Public/Private Road	50	50-100	5-25	50
8525-CAD-5505	408.6 - 408.8	Westchester	New right-of-way	50	–	–	50
8525-CAD-5504	408.8 - 409.1	Westchester	Public/Private Road	50	50-100	0-15	25-50
8525-CAD-5502	409.1 - 413.5	Westchester	Westchester County - South County Trailway	50	100	5	35
8525-CAD-5504	413.5 - 413.6	Westchester	Public/Private Road	50	50-100	0-75	75
8525-CAD-5500	413.6 - 414.0	Westchester	NYS Thruway Authority	50	200	7-75	50
8525-CAD-5501	414.0 - 414.2	Westchester	NYS Thruway Authority	50	200	0-200	50-75
8525-CAD-5500	414.2 - 414.5	Westchester	NYS Thruway Authority	50	200	7-75	75
8525-CAD-5504	414.5 - 414.6	Westchester	Public/Private Road in Sprain Ridge Park	50	50-100	0-50	75
8525-CAD-5505	414.6 - 414.7	Westchester	New right-of-way	50	–	–	50
8525-CAD-5504	414.7 - 416.5	Westchester	Public/Private Road in Sprain Ridge Park	50	50-100	0-25	20-75
8525-CAD-5505	416.5 - 416.6	Westchester	New right-of-way	50	–	–	75
A-1080	416.6 - 418.5	Westchester	Sprain Brook Parkway	50	150	25	75
A-1081	418.5 - 419.0	Westchester	Palmer Road c/	NA	35	NA	25
A-1080	419.0 - 419.3	Westchester	Sprain Brook Parkway	50	150	25	75
A-1081	419.3 - 420.2	Westchester	Midland Avenue c/	NA	65	NA	35

TABLE C1 (cont'd)

Cross Section	Mileposts	County	Owner of Parallel Right-of-way	Overlap Dimensions a/ A	B	C	D
A-1081	420.2 - 420.5	Westchester	Bronx River Road c/	NA	65	NA	35
A-1080	420.5 - 420.9	Westchester	Bronx River Parkway	50	350-700	25	75
A-1081	420.9 - 421.2	Westchester	Mac Questin Parkway c/	NA	35	NA	25
A-1081	421.2 - 421.4	Westchester	Oak Street c/	NA	50	NA	20
A-1081	421.4 - 421.5	Westchester	Lincoln Avenue c/	NA	Varies	NA	35
A-1081	421.5 - 421.7	Westchester	Valentine Street c/	NA	50	NA	20
A-1081	421.7 - 421.7	Westchester	North Roosevelt c/	NA	60	NA	30
A-1081	421.8 - 421.8	Westchester	South 7th Street c/	NA	60	NA	35
CON ED OFFSET/TACONIC PARKWAY ALTERNATIVE							
A-1091 No. 2	0.11 - 0.50	Westchester	ConEd powerline right-of-way	50	400	100	110
A-1091 No. 1	0.50 - 0.84	Westchester	ConEd powerline right-of-way	50	400-870	100	75
A-1091 No. 1	0.84 # 0.90	Westchester	ConEd powerline right-of-way	50	400	85	75
A-1091 No. 1	0.91 - 1.12	Westchester	ConEd powerline right-of-way	50	400	100	75
A-1091 No. 2	1.12 - 1.50	Westchester	ConEd powerline right-of-way	50	400-650	100	75
A-1091 No. 1	1.50 - 3.05	Westchester	ConEd powerline right-of-way	50	400-765	100	75
A-1091 No. 1	3.05 - 3.18	Westchester	ConEd powerline right-of-way	50	400-550	85	75
A-1091 No. 1	3.18 - 3.56	Westchester	ConEd powerline right-of-way	50	400-730	100	75
A-1091 No. 2	3.56 - 4.04	Westchester	ConEd powerline right-of-way	50	400-1000	100-350	75
A-1091 No. 1	4.04 - 4.66	Westchester	ConEd powerline right-of-way	50	400-1400	100	75
A-1091 No. 2	4.66 - 4.77	Westchester	ConEd powerline right-of-way	50	400	100-160	75
A-1091 No. 1	4.77 - 5.09	Westchester	ConEd powerline right-of-way	50	400	100	75
A-1091 No. 2	5.09 - 5.75	Westchester	ConEd powerline right-of-way	50	400-1800	100-240	50
A-1091 No. 1	5.75 - 6.36	Westchester	ConEd powerline right-of-way	50	400	100	75
A-1091 No. 2	6.36 - 6.58	Westchester	ConEd powerline right-of-way	50	400	100-290	75
A-1091 No. 1	6.58 - 7.47	Westchester	ConEd powerline right-of-way	50	400-1100	100	75
A-1091 No. 2	7.47 - 7.64	Westchester	ConEd powerline right-of-way	50	1100	100-500	75
A-1093, No. 3	7.64 - 7.98	Westchester	NYSDOT - Taconic State Parkway	50	400-550	20	40-55
A-1097, No. 7	7.98 - 8.30	Westchester	NYSDOT - Taconic State Parkway	50	50	20-180	50
A-1093, No. 3	8.30 - 8.76	Westchester	NYSDOT - Taconic State Parkway	50	400-1000	20	40-70
A-1094, No. 4	8.76 - 9.54	Westchester	NYSDOT - North County Trail	50	325-400	0-5	50-65
--	9.54 - 9.59	Westchester	New right-of-way	50	–	–	50
A-1093, No. 3	9.59 - 10.82	Westchester	NYSDOT - Taconic State Parkway	50	250-400	20-60	35-80
A-1096, No. 6	10.82 - 11.20	Westchester	NYSDOT - Taconic State Parkway - On/Off Ramps	50	160-400	25	50-160
A-1095, No. 5	11.20 - 11.43	Westchester	NYSDOT - Taconic State Parkway	50	100-300	3	25-45
A-1097, No. 7	11.43 - 11.49	Westchester	NYSDOT - Taconic State Parkway	50	50	40	

TABLE C1 (cont'd)

Cross Section	Mileposts	County	Owner of Parallel Right-of-way	Overlap Dimensions a/			
				A	B	C	D
A-1095, No. 5	11.49 - 13.18	Westchester	NYSDOT - Taconic State Parkway	50	300-650	3	25-30
A-1097, No. 7	13.18 - 13.25	Westchester	NYSDOT - Taconic State Parkway	50	50	Varies	50
--	13.25 - 13.27	Westchester	New right-of-way	50	--	--	50
A-1097, No. 7	13.27 - 13.31	Westchester	NYSDOT - Taconic State Parkway	50	50	Varies	50

a/ A = Permanent right-of-way for proposed pipeline.
B = Existing pipeline, powerline, road, railroad, or bicycle right-of-way.
C = Distance between existing utility and proposed pipeline.
D = Nominal construction right-of-way.

b/ Existing pipeline to be removed and replaced by proposed pipeline.

c/ Spoil will be stored in front of or behind equipment, or removed from street.

'A' = PERMANENT R.O.W. FOR PROPOSED LINE
'B' = EXISTING PIPELINE R.O.W.
'C' = DISTANCE BETWEEN EXIST. & PROPOSED LINES
'D' = CONSTRUCTION WORK AREA

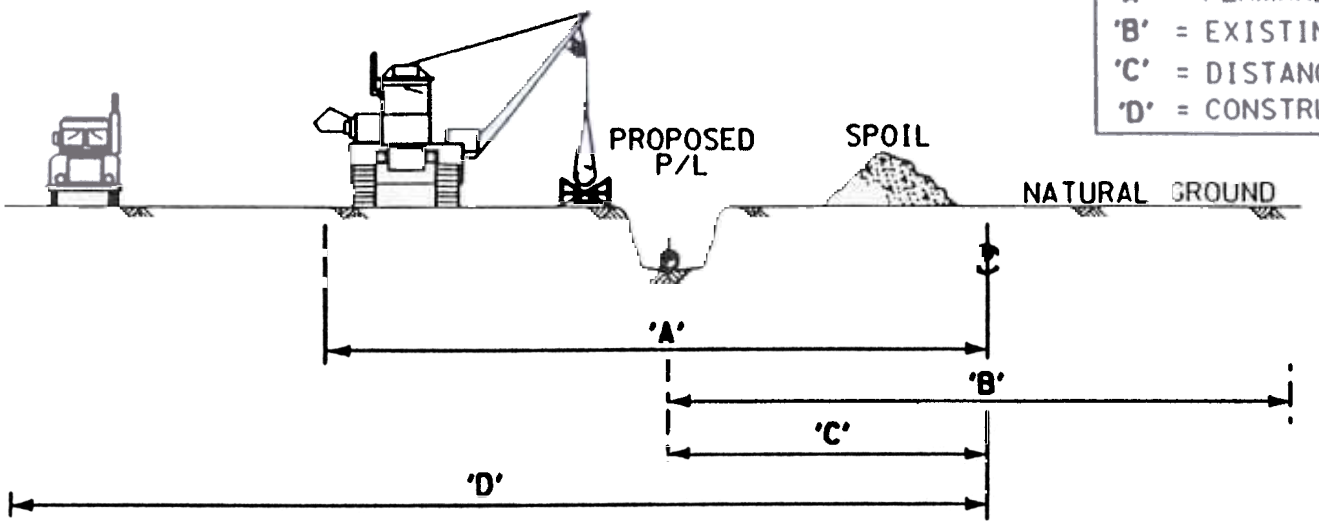

NOTE:
AN ADDITIONAL 25 FEET OF TEMPORARY CONSTRUCTION R.O.W. WILL BE UTILIZED IN CROPLANDS FOR TOPSOIL CONSERVATION.

R.O.W. CROSS SECTION

OWNER OF PARALLEL ROW	APPROXIMATE MILEPOSTS	DIMENSIONS 'A'	'B'	'C'	'D'
* COLUMBIA GAS TRANSMISSION	41.7-43.9	50'	50'	25'	75'
* COLUMBIA GAS TRANSMISSION	47.5-71.8	50'	50'	25'	75'
* COLUMBIA GAS TRANSMISSION	71.9-88.0	50'	50'	25'	75'

OWNER OF PARALLEL ROW	APPROXIMATE MILEPOSTS	DIMENSIONS 'A'	'B'	'C'	'D'
* COLUMBIA GAS TRANSMISSION	147.7-157.1	50'	50'	25'	75'
* COLUMBIA GAS TRANSMISSION	157.9-195.9	50'	50'	25'	75'
* COLUMBIA GAS TRANSMISSION	203.6-232.2	50'	50'	25'	75'
* COLUMBIA GAS TRANSMISSION	243.5-284.4	50'	50'	25'	75'
NY STATE ELECTRIC & GAS	244.9-245.7	50'	125'	25'	75'
NY STATE ELECTRIC & GAS	284.4-284.7	50'	125'	50'	75'

* PORTIONS OF THE EXISTING PIPELINE NOT CONTAINED IN THE PROPOSED PERMANENT R.O.W. WILL BE UTILIZED FOR EXCESS SPOIL & LIMITED CONSTRUCTION ACCESS.

LEGEND

- EXISTING POWER TOWER
- PROPOSED PIPELINE
- EXISTING PIPELINE
- R.O.W. RIGHT-OF-WAY

FLUOR DANIEL WILLIAMS BROTHERS

MILLENNIUM PIPELINE

TYPICAL RIGHT-OF-WAY CROSS SECTION PROPOSED PIPELINE ADJACENT TO EXISTING PIPELINE

Date 9-21-98
Approved

ST-8525-000-A-1075
REV.1

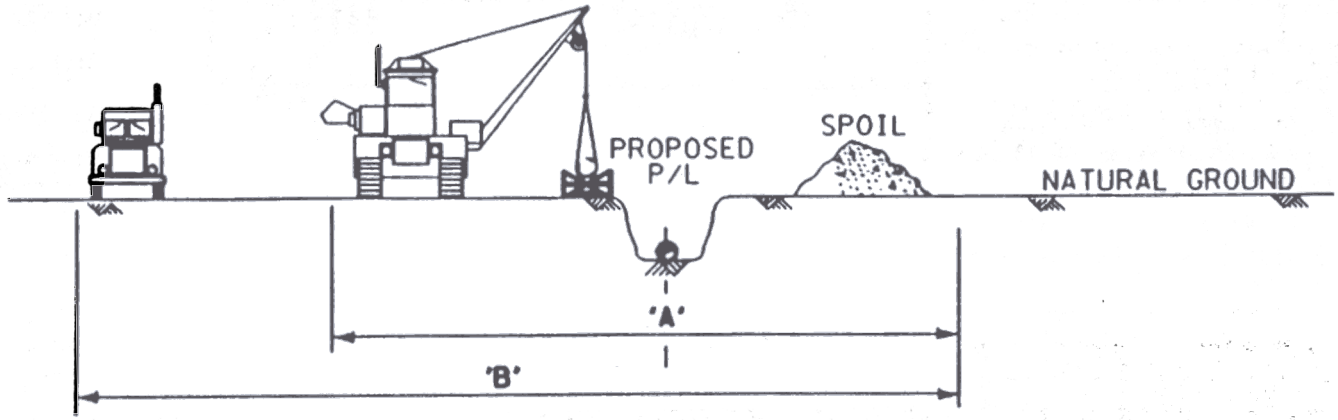

R.O.W. CROSS SECTION

NOTE: AN ADDITIONAL 25 FEET OF TEMPORARY CONSTRUCTION R.O.W. WILL BE UTILIZED IN CROPLANDS FOR TOPSOIL CONSERVATION.

'A' = PERMANENT R.O.W. FOR PROPOSED LINE
'B' = CONSTRUCTION WORK AREA

NOTE: EXISTING PIPELINE TO BE REMOVED AND REPLACED BY PROPOSED PIPELINE

OWNER OF R.O.W.	APPROXIMATE MILEPOSTS	DIMENSIONS 'A'	DIMENSIONS 'B'
BUCKEYE PIPELINE CORP.	100.9-104.4	50'	75'
COLUMBIA GAS TRANSMISSION	107.7-109.5	50'	75'
VANDERMARK EXPLORATION	111.9-131.9	50'	75'
COLUMBIA GAS TRANSMISSION	132.0-133.3	50'	75'
COLUMBIA GAS TRANSMISSION	285.6-376.7	50'	75'

LEGEND

PROPOSED PIPELINE

R.O.W. RIGHT-OF-WAY

FLUOR DANIEL WILLIAMS BROTHERS

MILLENNIUM PIPELINE

TYPICAL RIGHT-OF-WAY CROSS SECTION
PROPOSED PIPELINE REPLACING
EXISTING PIPELINE

Date 9-21-98

Approved

ST-8525-000-A-1076

REV. 1

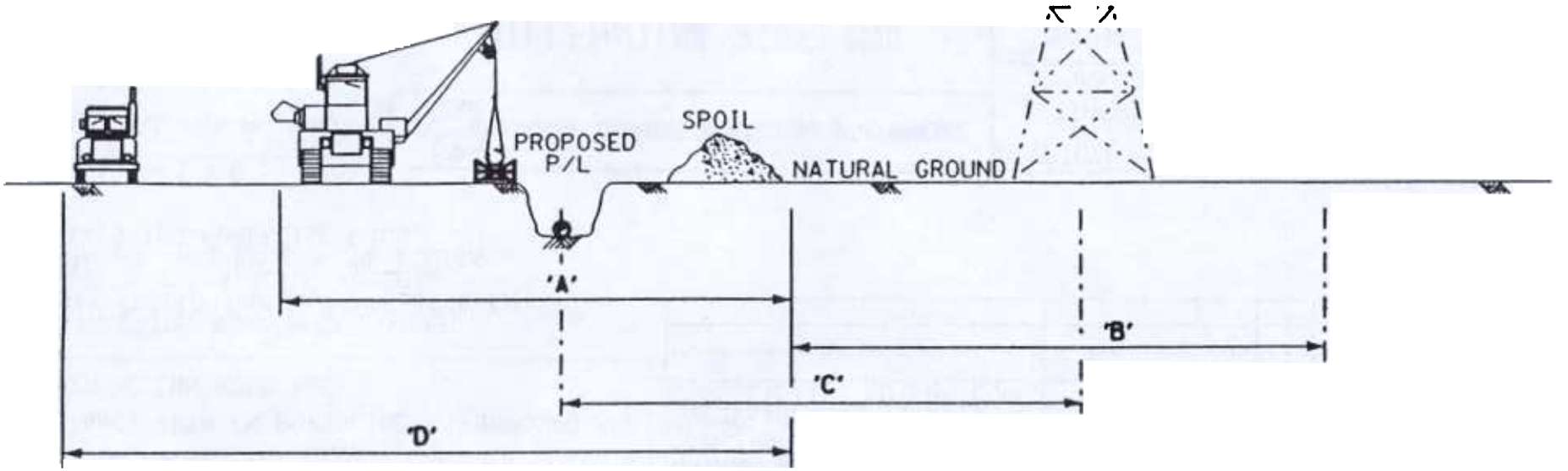

R.O.W. CROSS SECTION

NOTE: AN ADDITIONAL 25 FEET OF TEMPORARY CONSTRUCTION R.O.W. WILL BE UTILIZED IN CROPLANDS FOR TOPSOIL CONSERVATION.

'A' = PERMANENT R.O.W. FOR PROPOSED LINE
'B' = EXISTING POWERLINE R.O.W.
'C' = DISTANCE BETWEEN POWERLINE & PROPOSED P/L
'D' = CONSTRUCTION WORK AREA

OWNER OF PARALLEL R.O.W.	APPROXIMATE MILEPOSTS	DIMENSIONS			
		'A'	'B'	'C'	'D'
NIAGARA MOHAWK POWER CORP.	37.2-39.8	50'	175'	75'	75'
NIAGARA MOHAWK POWER CORP.	109.5-111.9	50'	100'	75'	75'
NIAGARA MOHAWK POWER CORP.	133.3-143.0	50'	100'	75'	75'
NY STATE ELECTRIC & GAS	197.8-203.6	50'	125'	25'	75'
CONSOLIDATED EDISON CORP.	391.6-399.1	50'	400'	50'	75'

LEGEND

EXISTING POWER TOWER
PROPOSED PIPELINE
EXISTING PIPELINE
R.O.W. RIGHT-OF-WAY

FLUOR DANIEL WILLIAMS BROTHERS

MILLENNIUM PIPELINE

TYPICAL RIGHT-OF-WAY CROSS SECTION
PROPOSED PIPELINE ADJACENT TO
EXISTING POWERLINE

Date 9-21-98
Approved

ST-8525-000-A-1077
REV. 1

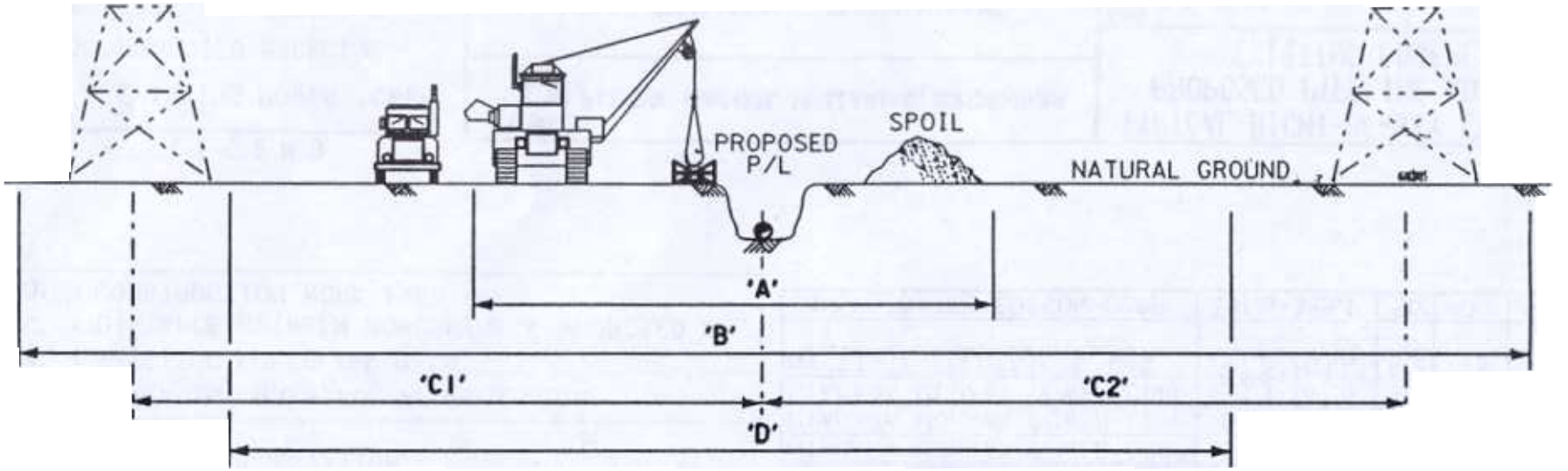

R.O.W. CROSS SECTION

'A' = PERMANENT R.O.W. FOR PROPOSED LINE
'B' = EXISTING POWERLINE R.O.W.
'C' = DISTANCE BETWEEN POWERLINE & PROPOSED P/L
'D' = CONSTRUCTION WORK AREA

OWNER OF PARALLEL R.O.W.	APPROXIMATE MILEPOSTS	DIMENSIONS				
		'A'	'B'	'C1'	'C2'	'D'
NEW YORK ST. ELECT. & GAS	232.2-243.5	50'	250'	50'	50'	75'
CONSOLIDATED EDISON CORP.	399.4-405.1	50'	400'	90'	85'	200'
CONSOLIDATED EDISON CORP.	408.0-417.3	50'	200'	40'	40'	200'

NOTE: CONSTRUCTION WORK AREA LIMITS, "D", MAY EXCEED THE DISTANCE BETWEEN THE NEAREST POWERLINE TOWERS, BUT IN NO CASE EXCEED THE LIMITS OF THE EXISTING POWERLINE R.O.W.

LEGEND

EXISTING POWER TOWER
PROPOSED PIPELINE
EXISTING PIPELINE
R.O.W. RIGHT-OF-WAY

FLUOR DANIEL WILLIAMS BROTHERS

MILLENNIUM PIPELINE

TYPICAL RIGHT-OF-WAY CROSS SECTION
PROPOSED PIPELINE ADJACENT TO
MULTIPLE EXISTING POWERLINES

Date 9-21-98
Approved

ST-8525-000-A-1078
REV. 2

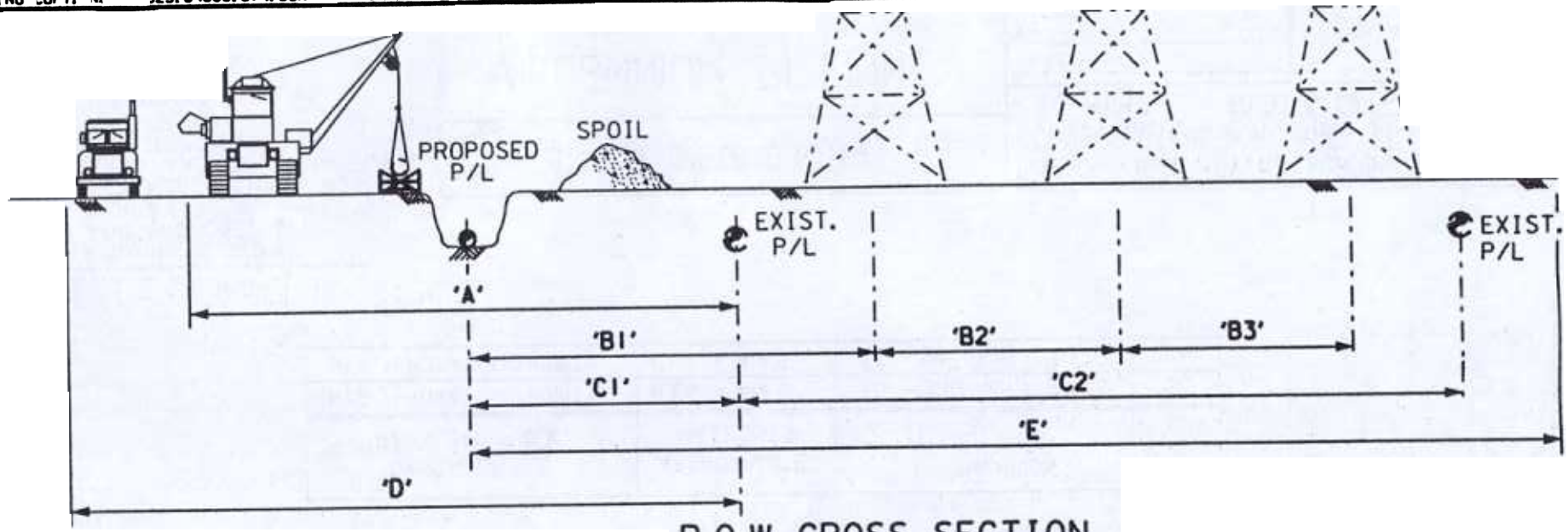

R.O.W. CROSS SECTION

OWNER OF PARALLEL R.O.W.	APPROXIMATE MILEPOSTS	DIMENSIONS							
		'A'	'B1'	'B2'	'B3'	'C1'	'C2'	'D'	'E'
NIAGARA MOHAWK/TENN. GAS	44.7-47.5	50'	75'	N/A	N/A	25'	25'	75'	125'
COLUMBIA/TENNESSEE GAS	157.3-157.9	50'	N/A	N/A	N/A	25'	25'	75'	75'
ORANGE & ROCKLAND UTIL'S.	383.5-387.5	50'	75'	35'	40'	200'	N/A	75'	250'

NOTE: AN ADDITIONAL 25 FEET OF TEMPORARY CONSTRUCTION R.O.W. WILL BE UTILIZED IN CROPLANDS FOR TOPSOIL CONSERVATION.

'A' = PERMANENT R.O.W. FOR PROPOSED LINE
'B' = DISTANCE BETWEEN EXIST. POWERLINES & PROPOSED P/L
'C' = DISTANCE BETWEEN EXISTING P/L(S) & PROPOSED P/L
'D' = CONSTRUCTION WORK AREA
'E' = EXISTING POWERLINE & PIPELINE R.O.W.

LEGEND

- EXISTING POWER TOWER
- PROPOSED PIPELINE
- EXISTING PIPELINE
- P/L PIPELINE
- R.O.W. RIGHT-OF-WAY

FLUOR DANIEL WILLIAMS BROTHERS

MILLENNIUM PIPELINE

TYPICAL RIGHT-OF-WAY CROSS SECTION PROPOSED PIPELINE ADJACENT TO EXIST. PIPELINE(S)/POWERLINE(S)

Date 9-21-98

Approved

ST-8525-000-A-1079

REV. 2

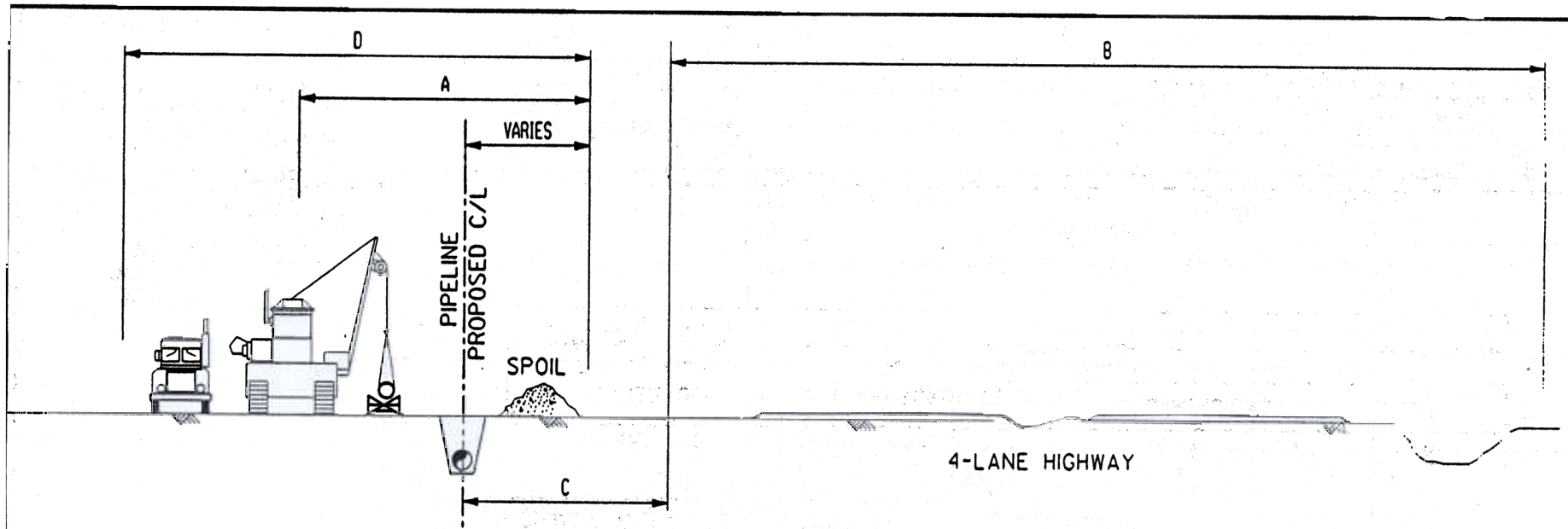

HIGHWAY R.O.W. CROSS SECTION

OWNER OF PARALLEL R.O.W.	APPROXIMATE MILEPOSTS	DIMENSIONS			
		'A'	'B'	'C'	'D'
NYS THRUWAY AUTHORITY	413.6 - 414.0	50'	200' MIN	7'-75'	50'
NYS THRUWAY AUTHORITY	414.2 - 414.5	50'	200' MIN	7'-75'	75'

LEGEND

'A' = PERMANENT R.O.W. FOR PROPOSED LINE
'B' = HIGHWAY R.O.W.
'C' = DISTANCE BETWEEN ROAD R.O.W. AND PIPE CENTERLINE
'D' = CONSTRUCTION WORK AREA (CWA)
◐ PROPOSED PIPELINE
R.O.W. RIGHT-OF-WAY
C/L CENTERLINE

BAKER ENGINEERING NY, INC.

MILLENNIUM PIPELINE

TYPICAL RIGHT-OF-WAY CROSS SECTION
CONSTRUCTION WORK AREA ADJACENT
TO HIGHWAY - WORKING SIDE AWAY

Date 06-21-00 ISSUE A
Approved

8525-CAD-5500
REV. 0

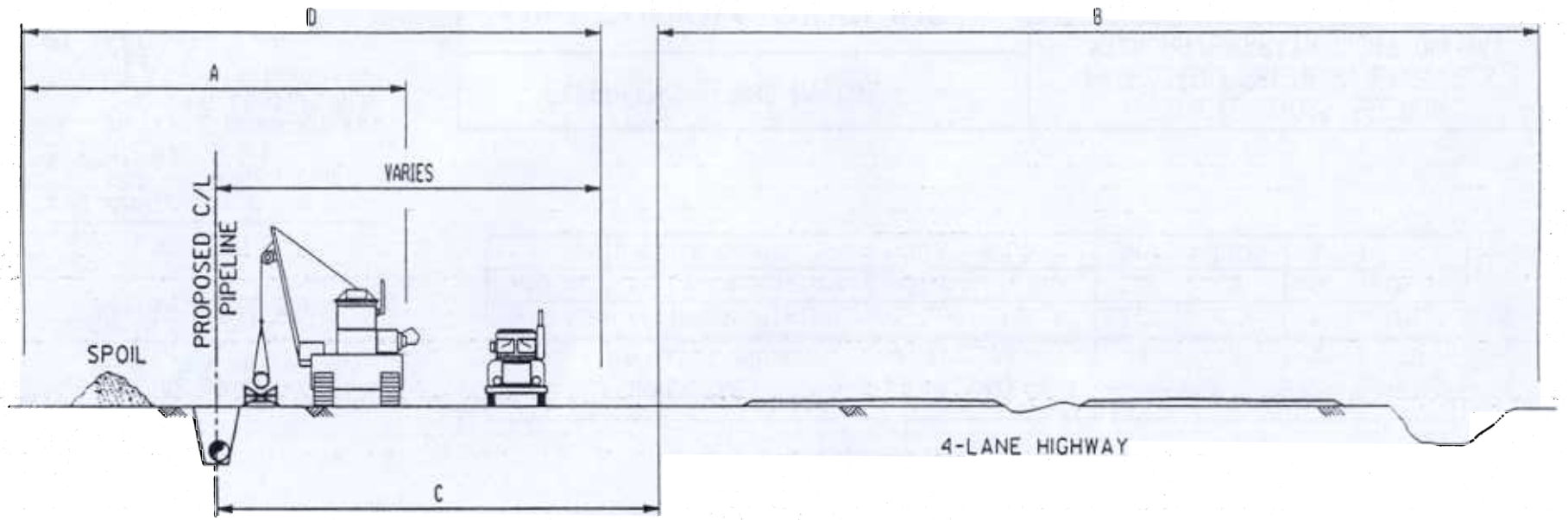

HIGHWAY R.O.W. CROSS SECTION

OWNER OF PARALLEL ROW	APPROXIMATE MILEPOSTS	DIMENSIONS			
		'A'	'B'	'C'	'D'
NYS THRUWAY AUTHORITY	414.0 - 414.2	50'	200' MIN	0'-200'	50'-75'

LEGEND

'A' = PERMANENT R.O.W. FOR PROPOSED LINE
'B' = HIGHWAY R.O.W.
'C' = DISTANCE BETWEEN ROAD R.O.W. AND PIPE CENTERLINE
'D' = CONSTRUCTION WORK AREA (CWA)
● PROPOSED PIPELINE
R.O.W. RIGHT-OF-WAY
C/L CENTERLINE

BAKER ENGINEERING NY, INC.

MILLENNIUM PIPELINE

TYPICAL RIGHT-OF-WAY CROSS SECTION CONSTRUCTION WORK AREA ADJACENT TO HIGHWAY - WORKING SIDE TOWARD

Date 06-21-00 ISSUE A

Approved

8525-CAD-5501

REV. 0

WORKING COPY: $$$$$$$$$$$$$$$$$$$$DGNSPEC DATE: $$$$$$$$$$SYSTIME BY: $$$$$$$$USER

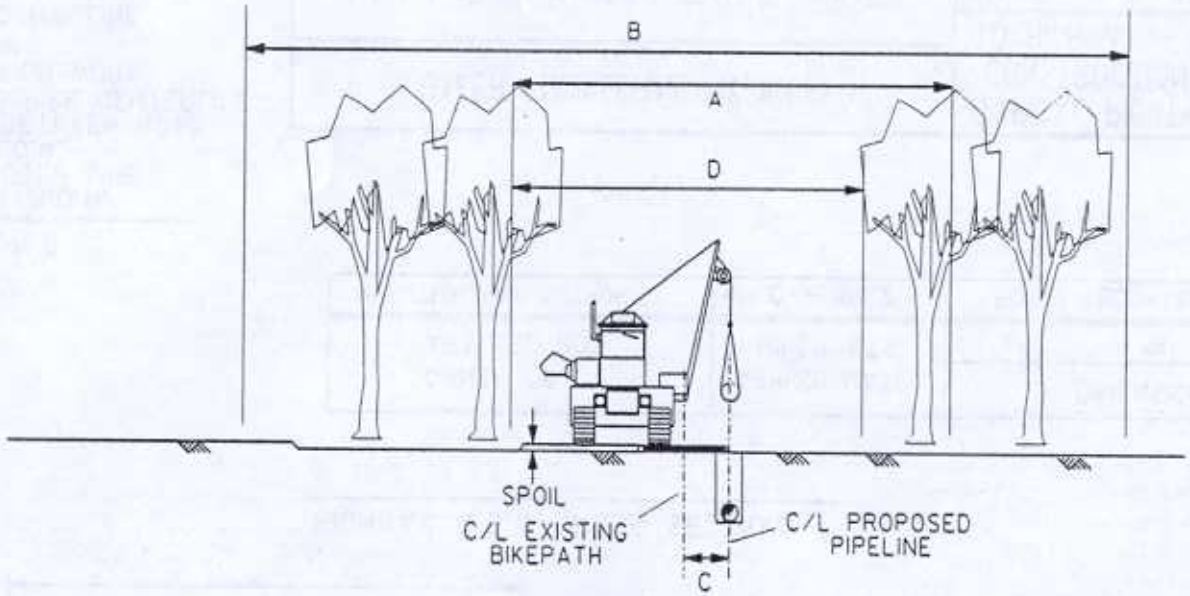

R.O.W. CROSS SECTION

NOTES:

1. LARGE (12" DIAM.) TREES WITHIN CWA WILL REMAIN
2. DEPTH OF COVER OVER PIPELINE TO BE 3' MIN

OWNER OF PARALLEL R.O.W.	APPROXIMATE MILEPOSTS	DIMENSIONS			
		'A'	'B'	'C'	'D'
NYS DEPT OF TRANSPORTATION	404.0 - 406.8	50'	100'	5'	25'
NYS DEPT OF TRANSPORTATION	407.8 - 408.3	50'	100'	5'	20'-50'
WESTCHESTER COUNTY	409.1 - 413.5	50'	100'	5'	35'

LEGEND

'A' = PERMANENT R.O.W. FOR PROPOSED LINE
'B' = HIGHWAY R.O.W.
'C' = DISTANCE BETWEEN TRAIL AND PIPE CENTERLINES
'D' = CONSTRUCTION WORK AREA (CWA)
● PROPOSED PIPELINE
R.O.W. RIGHT-OF-WAY
C/L CENTERLINE

BAKER ENGINEERING NY, INC.

MILLENNIUM PIPELINE

TYPICAL CROSS SECTION
PROPOSED PIPELINE IN EXISTING
ABAN. RR/BIKEPATH RIGHT OF WAY

Date 06-21-00 ISSUE A
Approved

8525-CAD-5502
REV. 0

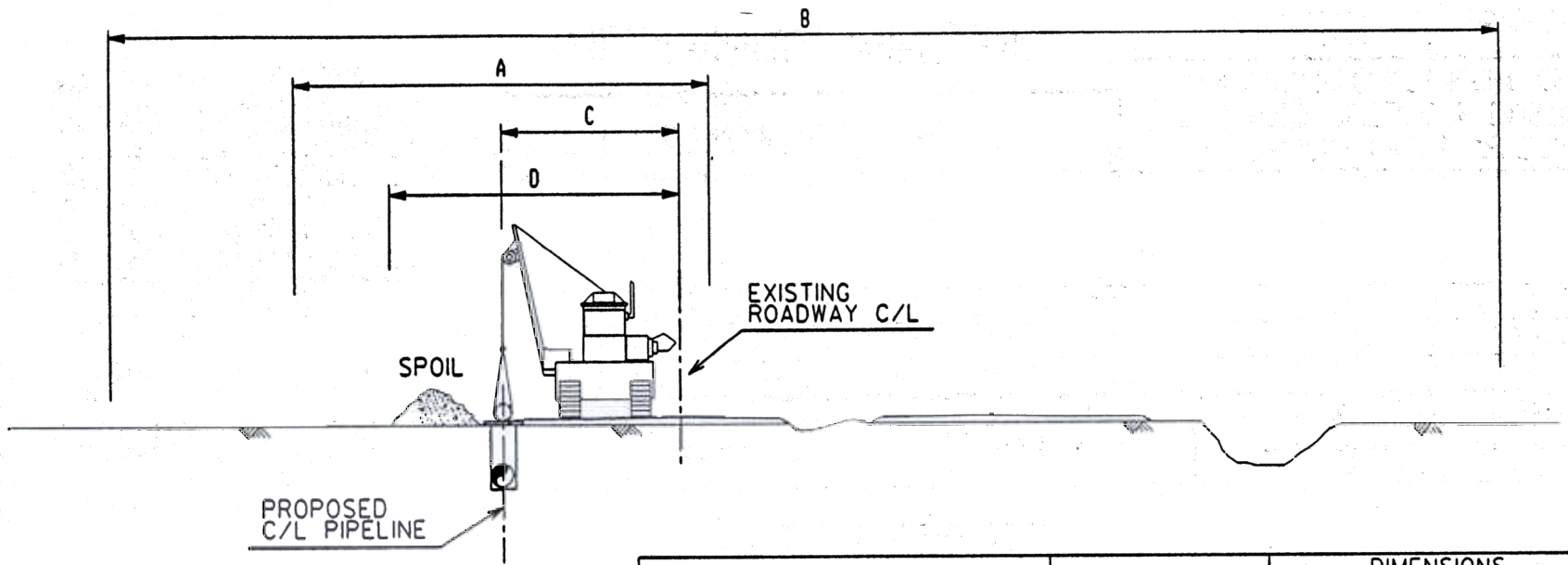

HIGHWAY R.O.W. CROSS SECTION

4-LANE HIGHWAY

OWNER OF PARALLEL R.O.W.	APPROXIMATE MILEPOSTS	DIMENSIONS			
		'A'	'B'	'C'	'D'
NYS DEPT OF TRANSPORTATION	391.8 - 392.6	50'	185'-300'	5'-50'	20'-35'
NYS DEPT OF TRANSPORTATION	392.9 - 394.2	50'	185'-300'	5'-50'	20'-35'
NYS DEPT OF TRANSPORTATION	397.0 - 401.3	50'	200'-360'	5'-50'	15'-75'
NYS DEPT OF TRANSPORTATION	401.6 - 404.0	50'	200'-360'	5'-50'	35'

LEGEND

'A' = PERMANENT R.O.W. FOR PROPOSED LINE
'B' = HIGHWAY R.O.W.
'C' = DISTANCE BETWEEN ROAD AND PIPE CENTERLINES
'D' = CONSTRUCTION WORK AREA (CWA)
● PROPOSED PIPELINE
R.O.W. RIGHT-OF-WAY
C/L CENTERLINE

BAKER ENGINEERING NY, INC.

MILLENNIUM PIPELINE

TYPICAL RIGHT-OF-WAY CROSS SECTION
PROPOSED PIPELINE WITHIN
HIGHWAY RIGHT OF WAY

Date 06-21-00 ISSUE A
Approved

8525-CAD-5503
REV. 0

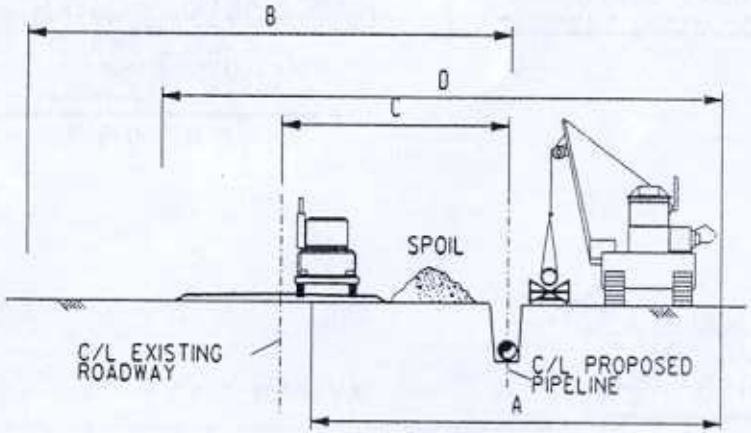

APPROXIMATE MILEPOSTS	DIMENSIONS			
	'A'	'B'	'C'	'D'
392.6 - 392.7	50'	50'-100'	15'-25'	35'
394.3 - 395.3	50'	50'-100'	0'-30'	20'-75'
395.5 - 396.4	50'	50'-100'	0'-50'	25'-50'
396.9 - 397.0	50'	50'-100'	0'-50'	25'
407.1 - 407.4	50'	50'-100'	0'-10'	30'
408.3 - 408.6	50'	50'-100'	5'-25'	50'
408.8 - 409.1	50'	50'-100'	0'-15'	25'-50'
413.5 - 413.6	50'	50'-100'	0'-75'	75'
414.5 - 414.6	50'	50'-100'	0'-50'	75'
414.7 - 416.5	50'	50'-100'	0'-25'	20'-75'

LEGEND

'A' = PERMANENT R.O.W. FOR PROPOSED LINE
'B' = ROAD R.O.W.
'C' = DISTANCE BETWEEN ROAD AND PIPE CENTERLINES
'D' = CONSTRUCTION WORK AREA (CWA)
● PROPOSED PIPELINE
R.O.W. RIGHT-OF-WAY
C/L CENTERLINE

BAKER ENGINEERING NY, INC.

MILLENNIUM PIPELINE

TYPICAL RIGHT-OF-WAY CROSS SECTION
PROPOSED PIPELINE ON
PUBLIC/PRIVATE ROADWAY

Date 06-21-00 ISSUE A
Approved

8525-CAD-5504
REV. 0

WORKING COPY: $$$$$$$$$$$$$$$$$$$$$DGNSPEC DATE: $$$$$$$$$$$SYSTIME BY: $$$$$$$$$USER

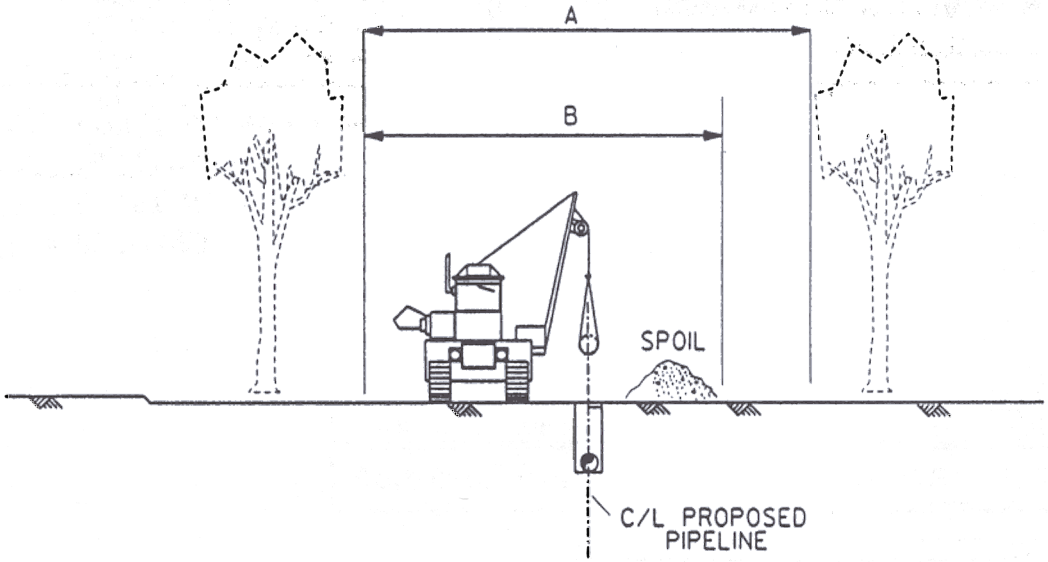

R.O.W. CROSS SECTION

APPROXIMATE MILEPOSTS	DIMENSIONS	
	'A'	'B'
391.2 - 391.8	50'	50'-75'
392.7 - 392.9	50'	75'
395.3 - 395.5	50'	20'
396.4 - 396.6	50'	25'-75'
401.3 - 401.6	50'	50'
406.8 - 407.1	50'	75'
407.4 - 407.8	50'	75'
408.6 - 408.8	50'	50'
414.6 - 414.7	50'	50'
416.5 - 416.6	50'	75'

NOTE:
1. DEPTH OF COVER OVER PIPELINE TO BE 3' MIN

LEGEND

'A' = PERMANENT R.O.W. FOR PROPOSED LINE
'B' = CONSTRUCTION WORK AREA
PROPOSED PIPELINE
R.O.W. RIGHT-OF-WAY
C/L CENTERLINE

BAKER ENGINEERING NY, INC.

MILLENNIUM PIPELINE

TYPICAL CROSS SECTION PROPOSED PIPELINE IN OPEN COUNTRY

Date 06-21-00 ISSUE A

Approved

8525-CAD-5505

REV. 0

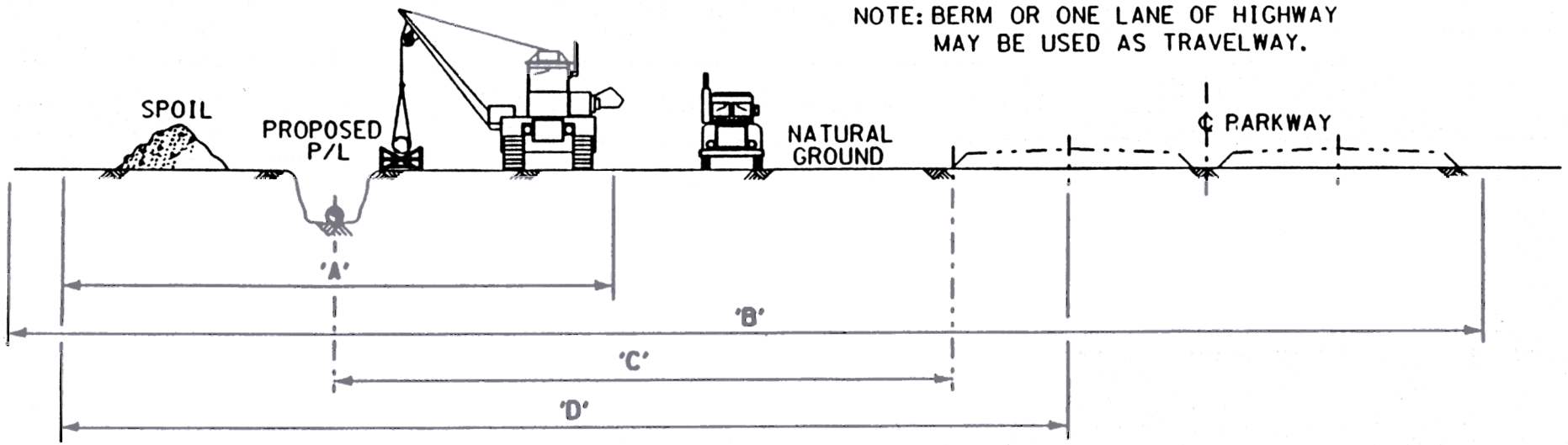

R.O.W. CROSS SECTION

OWNER OF PARALLEL R.O.W.	PARKWAY NAME	APPROXIMATE MILEPOSTS	DIMENSIONS			
			'A'	'B'	'C'	'D'
NEW YORK DEPT. OF TRANS.	SPRAIN BROOK	416.6-418.5	50'	150'	25'	75'
NEW YORK DEPT. OF TRANS.	SPRAIN BROOK	419.0-419.3	50'	150'	25'	75'
NEW YORK DEPT. OF TRANS.	BRONX RIVER*	420.5-420.9	50'	550'	25'	75'

'A' = PERMANENT R.O.W. FOR PROPOSED LINE
'B' = EXISTING PARKWAY R.O.W.
'C' = DISTANCE BETWEEN SHOULDER & PROPOSED P/L
'D' = CONSTRUCTION WORK AREA

* PARKWAY WIDTH VARIES FROM APPROXIMATELY 350' TO 700' IN THIS VICINITY.

LEGEND

PROPOSED PIPELINE

R.O.W. RIGHT-OF-WAY

FLUOR DANIEL WILLIAMS BROTHERS

MILLENNIUM PIPELINE

TYPICAL RIGHT-OF-WAY CROSS SECTION PROPOSED PIPELINE ADJACENT TO EXISTING ROAD

Date 9-21-98

Approved

ST-8525-000-A-1080

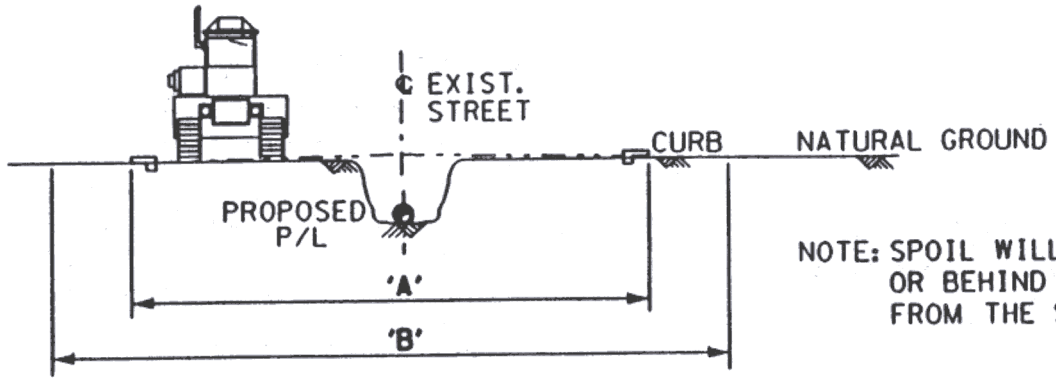

NOTE: SPOIL WILL BE STORED IN FRONT OF OR BEHIND EQUIPMENT, OR REMOVED FROM THE STREET.

R.O.W. CROSS SECTION

'A' = CONSTRUCTION WORK AREA

'B' = EXISTING STREET R.O.W. AND UTILITIES

OWNER OF PARALLEL R.O.W.	STREET NAME	APPROXIMATE MILEPOSTS	DIMENSIONS	
			'A'	'B'
TOWN OF CLARKSTON	RED ROCK ROAD	383.3-383.5	35'	35'
CITY OF YONKERS	PALMER ROAD	418.5-419.0	25'	35'
CITY OF YONKERS	MIDLAND AVENUE	419.3-420.2	35'	65'
CITY OF YONKERS	BRONX RIVER ROAD	420.2-420.5	35'	65'
TOWN OF MT VERNON	MAC QUESTIN PK'WY	420.9-421.2	25'	35'
TOWN OF MT VERNON	OAK STREET	421.2-421.4	20'	50'
TOWN OF MT VERNON	LINCOLN AVENUE	421.4-421.5	34'	VARIES
TOWN OF MT VERNON	VALENTINE STREET	421.5-421.7	20'	50'
TOWN OF MT VERNON	NORTH ROOSEVELT	421.7-421.7	30'	60'
TOWN OF MT VERNON	SOUTH 7TH STREET	421.8-421.8	35'	60'

LEGEND

● PROPOSED PIPELINE

R.O.W. RIGHT-OF-WAY

FLUOR DANIEL WILLIAMS BROTHERS

MILLENNIUM PIPELINE

TYPICAL RIGHT-OF-WAY CROSS SECTION
PROPOSED PIPELINE WITHIN
CITY STREET

Date 9-21-98

Approved

ST-8525-000-A-1081

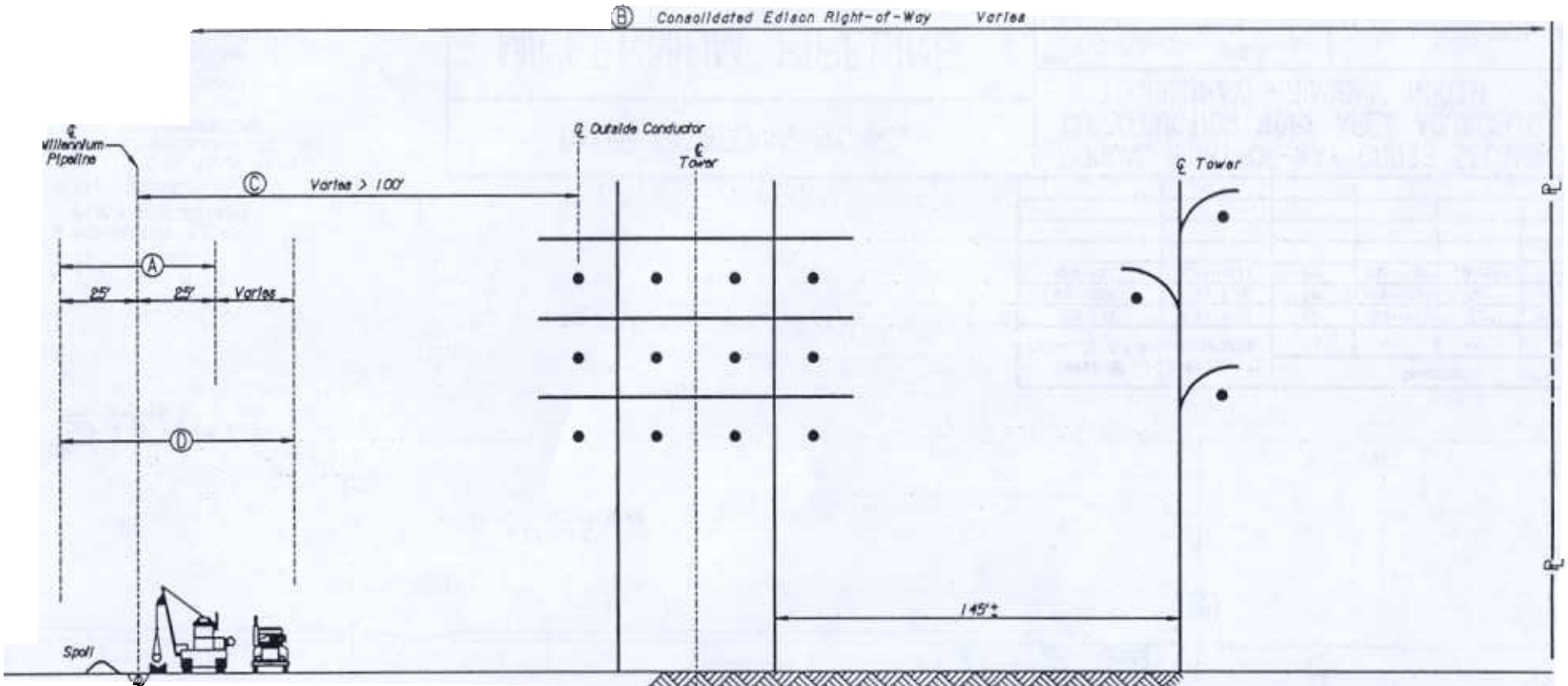

NOTE:

1. DEPTH OF COVER OVER PIPELINE TO BE 3' MIN.

LEGEND

'A' = PERMANENT 50' R.O.W.

'B' = CON-ED R.O.W.

'C' = DISTANCE ℄ PIPE TO ℄ OUTSIDE CONDUCTOR

'D' = CONSTRUCTION WORK AREA

● PROPOSED PIPELINE

R.O.W. RIGHT-OF-WAY

C/L CENTERLINE

OWNER OF PARALLEL R.O.W.	APPROXIMATE MILEPOSTS	DIMENSIONS			
		'A'	'B'	'C'	'D'
CON ED	0.11-0.50	50'	400'	100'	110'
CON ED	1.12-1.50	50'	400'-650'	100'	75'
CON ED	3.56-4.04	50'	400'-1000'	100'-350'	75'
CON ED	4.66-4.77	50'	400'	100'-160'	75'
CON ED	5.09-5.75	50'	400'-1800'	100'-240'	50'
CON ED	6.36-6.58	50'	400'	100'-290'	75'
CON ED	7.47-7.64	50'	1100'	100'-500'	75'

BAKER ENGINEERING NY, INC.

MILLENNIUM PIPELINE

TYPICAL RIGHT-OF-WAY CROSS SECTION CONSTRUCTION WORK AREA ADJACENT TO CON-ED POWERLINE (>100' OFFSET)

Date 05-03-01 ISSUE A

Approved JRA

ROW X-SECTION #2

ST-D002-000-A-1091 REV. 0

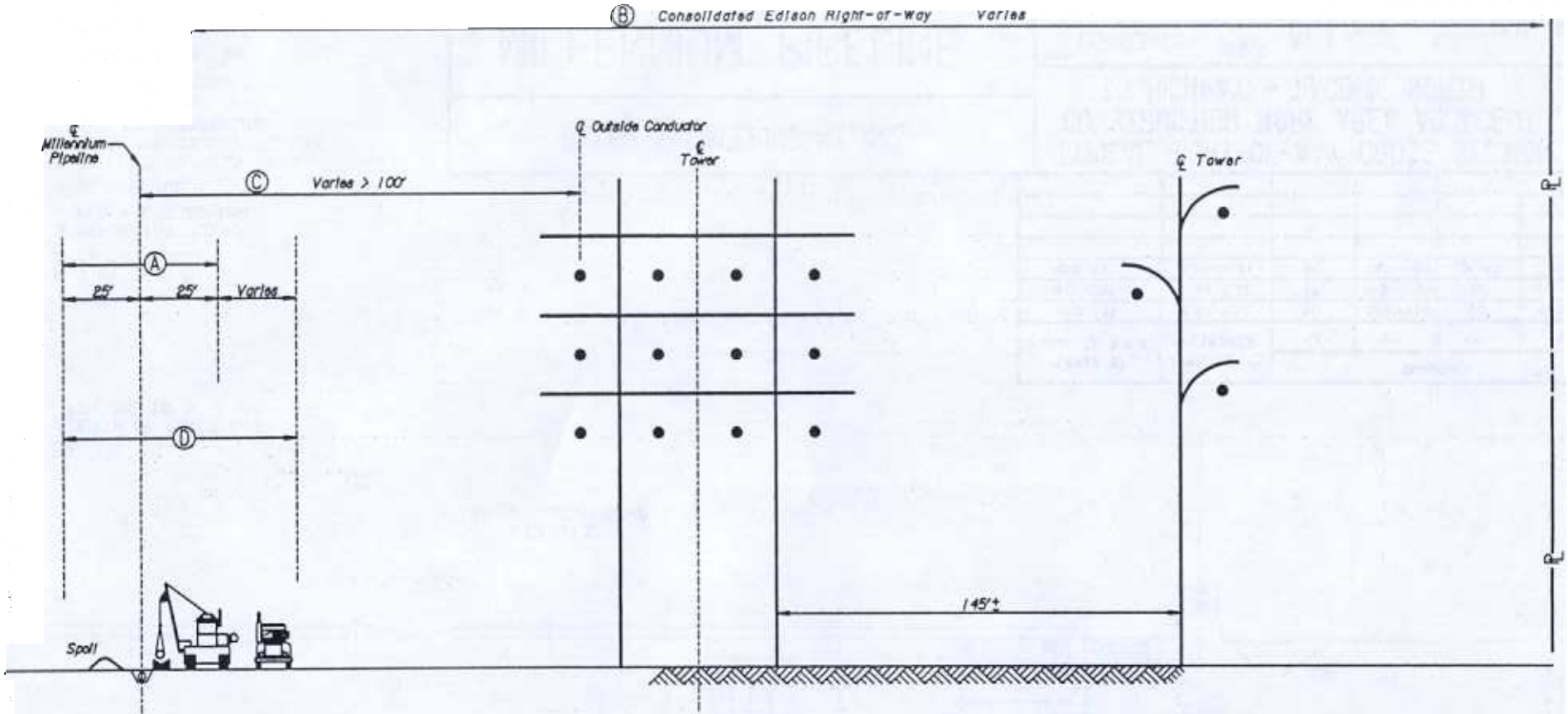

NOTE:

1. DEPTH OF COVER OVER PIPELINE TO BE 3' MIN.

LEGEND

'A' = PERMANENT 50' R.O.W.

'B' = CON-ED R.O.W.

'C' = DISTANCE ℄ PIPE TO ℄ OUTSIDE CONDUCTOR

'D' = CONSTRUCTION WORK AREA

● PROPOSED PIPELINE

R.O.W. RIGHT-OF-WAY

C/L CENTERLINE

OWNER OF PARALLEL R.O.W.	APPROXIMATE MILEPOSTS	DIMENSIONS			
		'A'	'B'	'C'	'D'
CON ED	0.11-0.50	50'	400'	100'	110'
CON ED	1.12-1.50	50'	400'-650'	100'	75'
CON ED	3.56-4.04	50'	400'-1000'	100'-350'	75'
CON ED	4.66-4.77	50'	400'	100'-160'	75'
CON ED	5.09-5.75	50'	400'-1800'	100'-240'	50'
CON ED	6.36-6.58	50'	400'	100'-290'	75'
CON ED	7.47-7.64	50'	1100'	100'-500'	75'

BAKER ENGINEERING NY, INC.

MILLENNIUM PIPELINE

TYPICAL RIGHT-OF-WAY CROSS SECTION CONSTRUCTION WORK AREA ADJACENT TO CON-ED POWERLINE (>100' OFFSET)

Date 05-03-01 ISSUE A

Approved JRA

ROW X-SECTION #2

ST-D002-000-A-1091 REV. 0

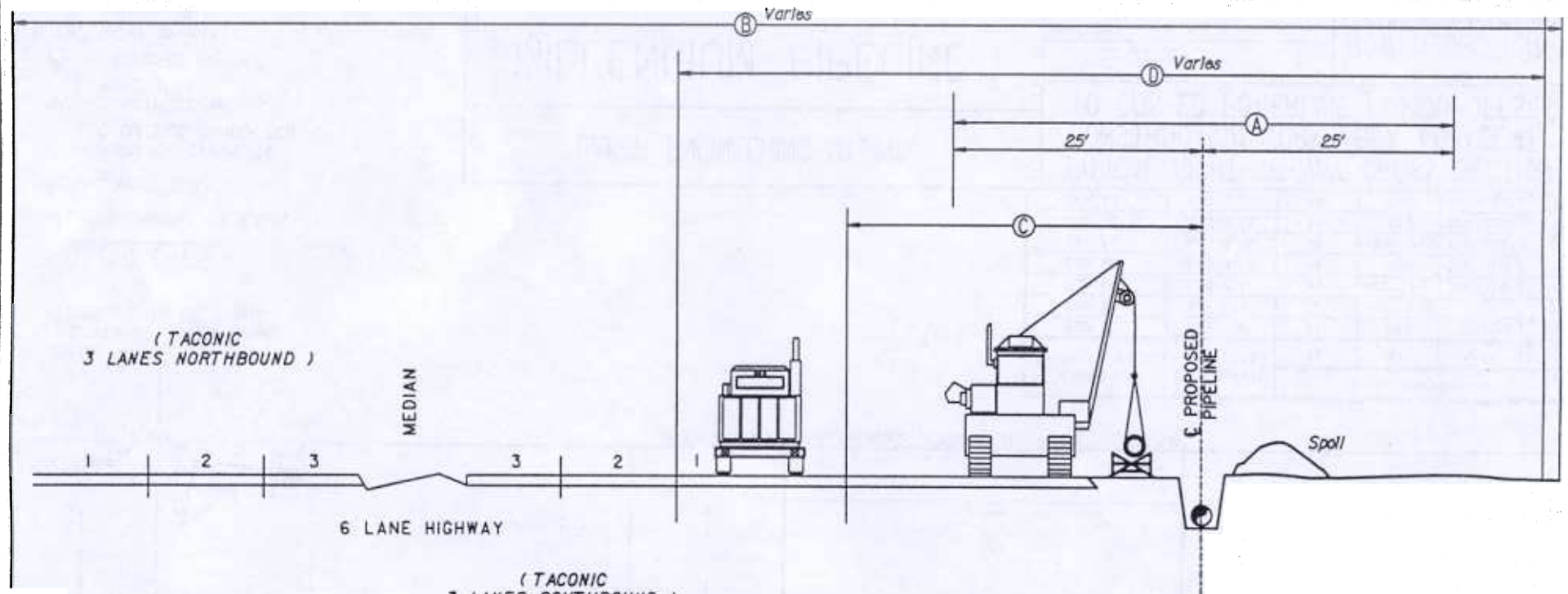

NOTE:

1. DEPTH OF COVER OVER PIPELINE TO BE 3' MIN.

OWNER OF PARALLEL R.O.W.	APPROXIMATE MILEPOSTS	DIMENSIONS			
		'A'	'B'	'C'	'D'
NYS-DOT	7.64-7.98	50'	400'-550'	20'	40'-55'
NYS-DOT	8.30-8.76	50'	400'-1000'	20'	40'-70'
NYS-DOT	9.59-10.82	50'	250'-400'	20'-60'	35'-80'

LEGEND

'A' = PERMANENT R.O.W. FOR PROPOSED LINE

'B' = HIGHWAY R.O.W.

'C' = DISTANCE BETWEEN ROAD SHOULDER SOLID WHITE LINE AND PIPE CENTERLINE

'D' = CONSTRUCTION WORK AREA (CWA)

◐ PROPOSED PIPELINE

R.O.W. RIGHT-OF-WAY

C/L CENTERLINE

BAKER ENGINEERING NY, INC.

MILLENNIUM PIPELINE

TYPICAL RIGHT-OF-WAY CROSS SECTION
CONSTRUCTION WORK AREA ADJACENT
TO HIGHWAY - TACONIC NORTH

Date 05-03-01 ISSUE A

Approved JRA

ROW X-SECTION #3

ST-D002-000-A-1093 REV. 0

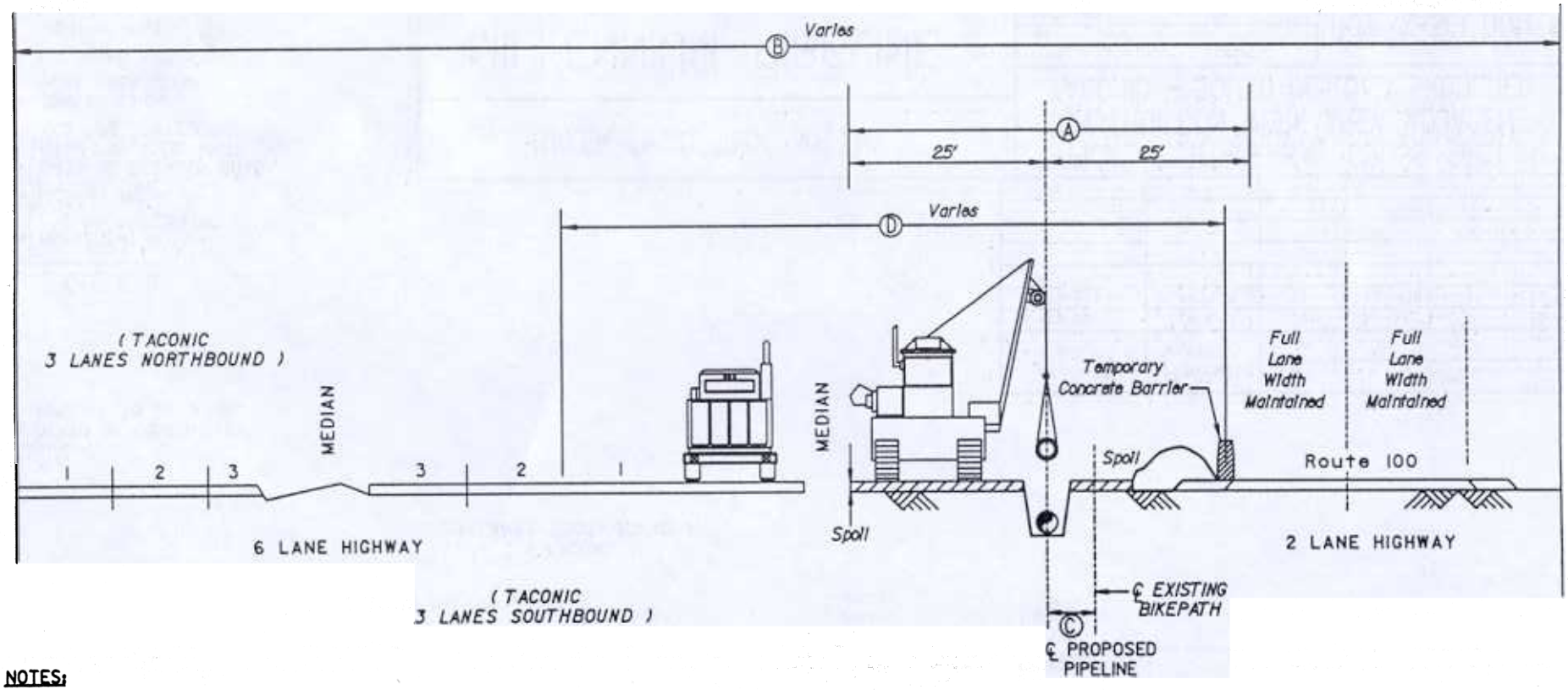

NOTES:

1. DEPTH OF COVER OVER PIPELINE TO BE 3' MIN.

OWNER OF PARALLEL R.O.W.	APPROXIMATE MILEPOSTS	DIMENSIONS			
		'A'	'B'	'C'	'D'
NYS-DOT	8.76-9.54	50'	325'-400'	0'-5'	50'-65'

LEGEND

'A' = PERMANENT R.O.W. FOR PROPOSED LINE

'B' = HIGHWAY R.O.W.

'C' = DISTANCE BETWEEN TRAIL AND PIPE CENTERLINES

'D' = CONSTRUCTION WORK AREA (CWA)

● PROPOSED PIPELINE

R.O.W. RIGHT-OF-WAY

C/L CENTERLINE

BAKER ENGINEERING NY, INC.

MILLENNIUM PIPELINE

TYPICAL RIGHT-OF-WAY CROSS SECTION
CONSTRUCTION WORK AREA ADJACENT
NORTH COUNTY TRAIL

Date 05-03-01 ISSUE A

Approved JRA

ROW X-SECTION #4

ST-D002-000-A-1094 REV. 0

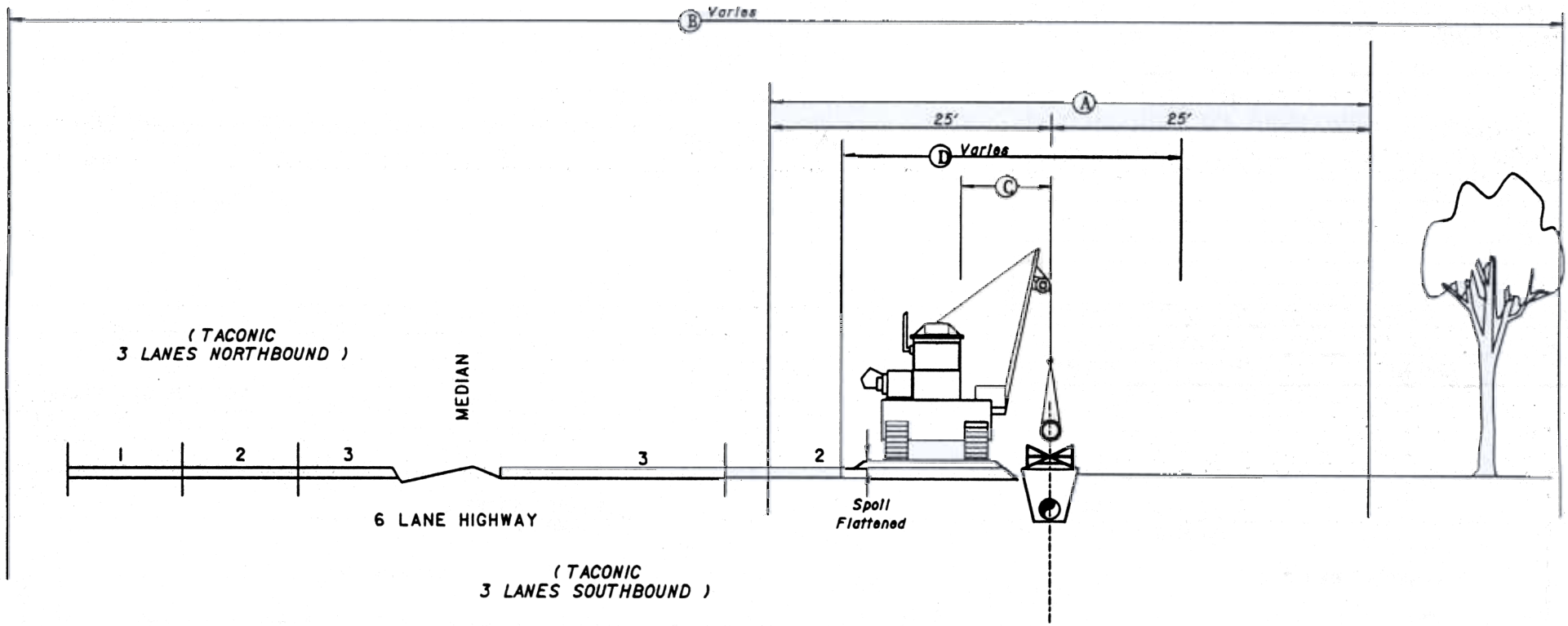

NOTE:

1. DEPTH OF COVER OVER PIPELINE TO BE 3' MIN.

OWNER OF PARALLEL R.O.W.	APPROXIMATE MILEPOSTS	DIMENSIONS			
		'A'	'B'	'C'	'D'
NYS-DOT	11.20-11.43	50'	100'-300'	3'	25'-45'
NYS-DOT	11.49-13.18	50'	300'-650'	3'	25'-30'

LEGEND

'A' = PERMANENT R.O.W. FOR PROPOSED LINE

'B' = HIGHWAY R.O.W.

'C' = DISTANCE BETWEEN ROAD SHOULDER SOLID WHITE LINE AND PIPE CENTERLINE

'D' = CONSTRUCTION WORK AREA (CWA)

PROPOSED PIPELINE

R.O.W. RIGHT-OF-WAY

C/L CENTERLINE

BAKER ENGINEERING NY, INC.

MILLENNIUM PIPELINE

TYPICAL RIGHT-OF-WAY CROSS SECTION
CONSTRUCTION WORK AREA ADJACENT
TACONIC - SOUTH IN ROAD SHOULDER

Date 05-03-01 ISSUE A

Approved JRA

ROW X-SECTION #5

ST-D002-000-A-1095 REV. 0

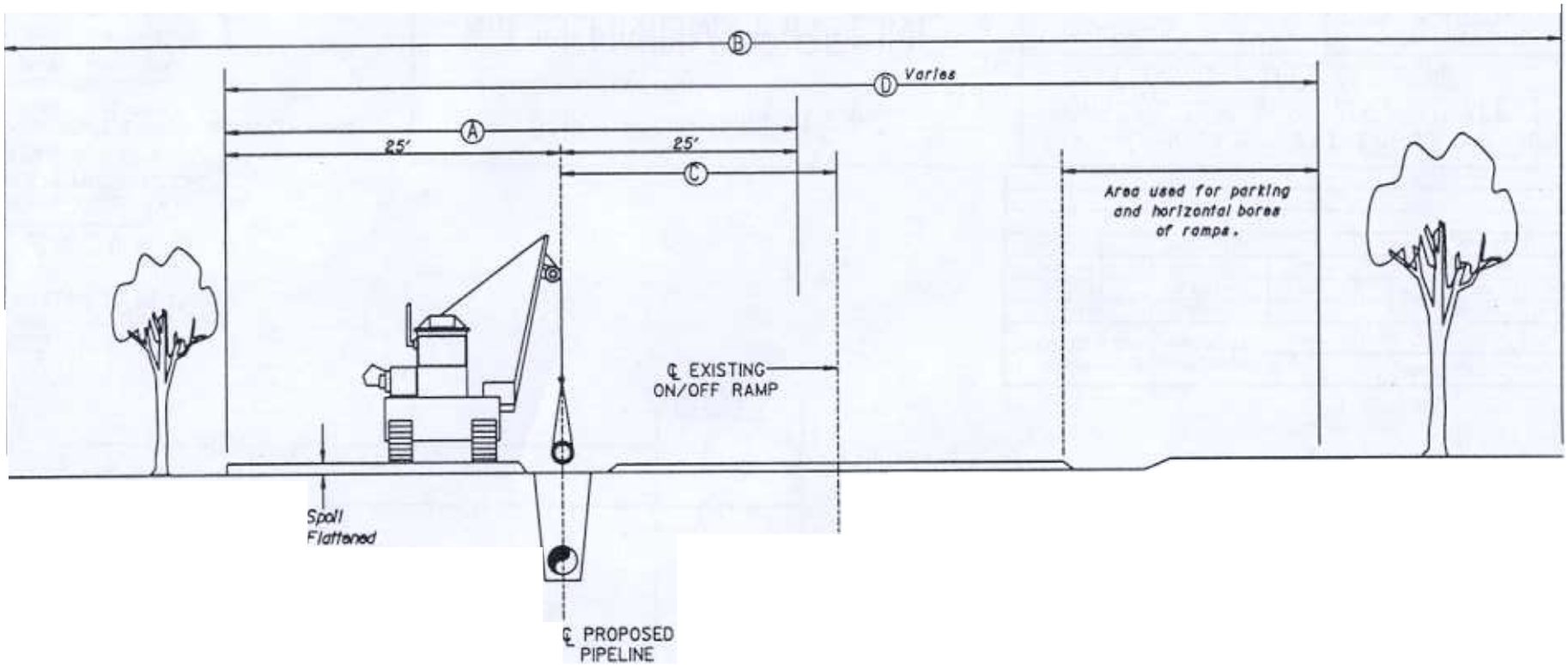

NOTE:

1. DEPTH OF COVER OVER PIPELINE TO BE 3' MIN.
2. RAMP WILL REMAIN OPEN

LEGEND

'A' = PERMANENT R.O.W. FOR PROPOSED LINE
'B' = HIGHWAY R.O.W.
'C' = DISTANCE BETWEEN ℄ RAMP AND PIPE CENTERLINES
'D' = CONSTRUCTION WORK AREA (CWA)
● PROPOSED PIPELINE
R.O.W. RIGHT-OF-WAY
C/L CENTERLINE

OWNER OF PARALLEL R.O.W.	APPROXIMATE MILEPOSTS	DIMENSIONS			
		'A'	'B'	'C'	'D'
NYS-DOT	10.82-11.20	50'	160'-400'	25'	50'-160'

BAKER ENGINEERING NY, INC.

MILLENNIUM PIPELINE

TYPICAL RIGHT-OF-WAY CROSS SECTION
CONSTRUCTION WORK AREA ADJACENT
TACONIC - ON/OFF RAMPS

Date 05-03-01 ISSUE A

Approved JRA

ROW X-SECTION #6
ST-D002-000-A-1096 REV. 0

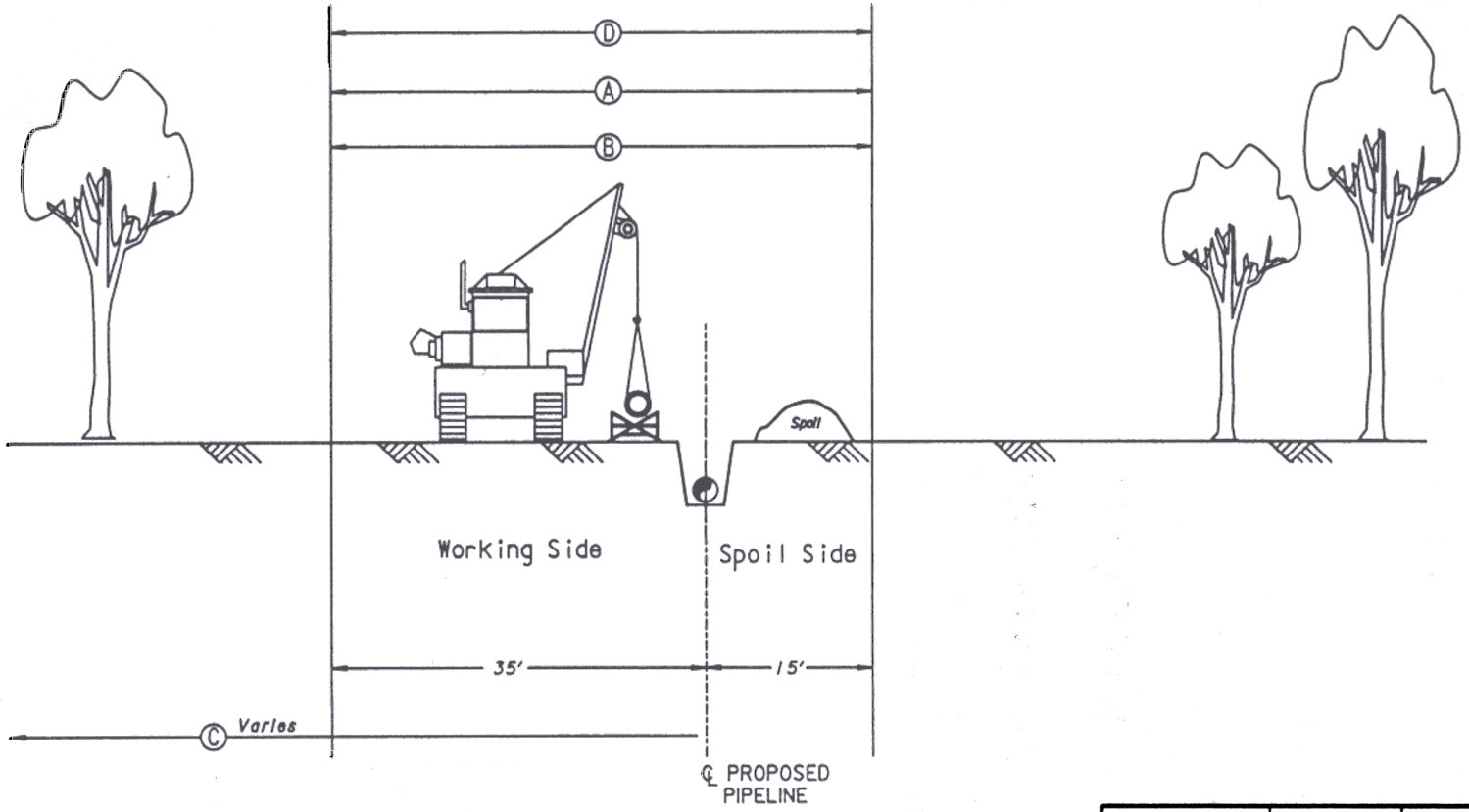

NOTE:

1. DEPTH OF COVER OVER PIPELINE TO BE 3' MIN.

LEGEND

'A' = PERMANENT R.O.W. FOR PROPOSED LINE

'B' = CLEARED R.O.W.

'C' = DISTANCE ℄ SHOULDER SOLID WHITE LINE TO ℄ PIPE

'D' = CONSTRUCTION WORK AREA (CWA)

◐ PROPOSED PIPELINE

R.O.W. RIGHT-OF-WAY

C/L CENTERLINE

OWNER OF PARALLEL R.O.W.	APPROXIMATE MILEPOSTS	DIMENSIONS			
		'A'	'B'	'C'	'D'
NYS-DOT	7.98-8.30	50'	50'	20'-180'	50'(35/15)
NYS-DOT	11.43-11.49	50'	50'	40'	95'
NYS-DOT	13.18-13.25	50'	50'	Varies	50'
NYS-DOT	13.27-13.31	50'	50'	Varies	50'

BAKER ENGINEERING NY, INC.

MILLENNIUM PIPELINE

TYPICAL RIGHT-OF-WAY CROSS SECTION
CONSTRUCTION WORK AREA ADJACENT
TACONIC - TREE CLEARING

Date 05-03-01 ISSUE A

Approved JRA

ROW X-SECTION #7

ST-D002-000-A-1097 REV. 0