APPENDIX C

PROJECT DRAWINGS

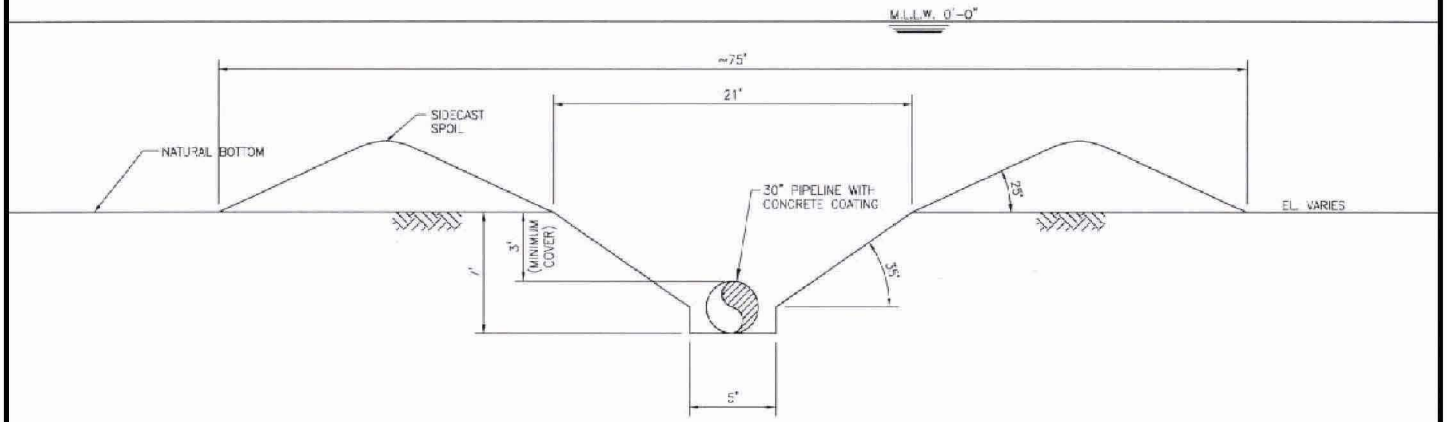

TYPICAL SUBSEA PIPE DITCH BY TOWED PLOW METHOD (3 TO 4 FT. OF COVER)

SCALE: N.T.S.

NOTES:

1. TRENCH CROSS SECTIONAL AREA IS APPROXIMATELY 79 SQUARE FEET.
2. TRENCH VOLUME FOR 19.7 MILES IS APPROXIMATELY 304,500 CUBIC YARDS.

ISSUED FOR CONSTRUCTION PLANNING PURPOSES

BROADWATER BROADWATER ENERGY	PROJECT CONSULTING SERVICES, INC. 3500 WEST ESPLANADE AVE. S., SUITE 500 METAIRIE, LA 70002-7465 (504) 833-5521 Fax (504) 833-4940 www.projectconsulting.com	TYPICAL TOWED PLOW SECTION (3 TO 4 FT. OF COVER)	DRAWN BY: S.E.M. DATE: 6-28-05 DWG. NO. 05032-051	CHK'D. BY: J.H.R. APPRV. BY: T.O. REV C

Appendix C-1
Broadwater LNG Project
Typical Subsea Pipe Ditch by Towed Plow - 3 to 4 feet of Cover

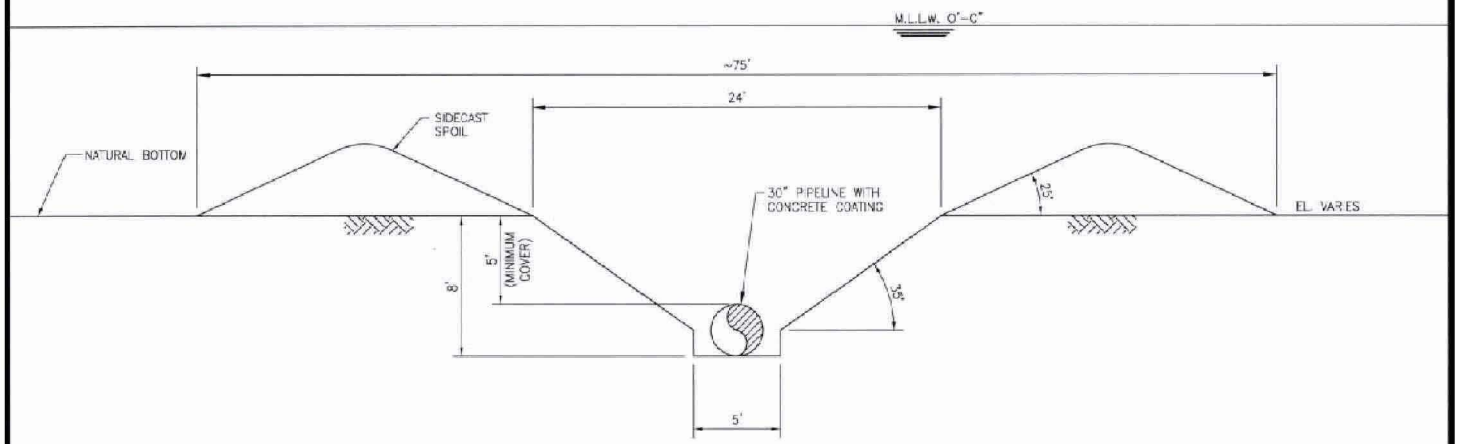

TYPICAL SUBSEA PIPE DITCH BY TOWED PLOW METHOD (5 FT. OF COVER)

SCALE: N.T.S.

NOTES:

1. TRENCH CROSS SECTIONAL AREA IS APPROXIMATELY 101 SQUARE FEET.
2. TRENCH VOLUME FOR 2 MILES IS APPROXIMATELY 39,500 CUBIC YARDS.

ISSUED FOR CONSTRUCTION PLANNING PURPOSES

BROADWATER BROADWATER ENERGY	PROJECT CONSULTING SERVICES, INC. 3300 WEST ESPLANADE AVE., S., SUITE 500 METAIRIE, LA 70002-7436 (504) 835-5321 Fax (504) 835-4040 www.projectconsulting.com	TYPICAL TOWED PLOW SECTION (5 FT. OF COVER)	DRAWN BY: G.J.C. DATE: 8-12-05 DWG. NO. 05032-060	CHK'D. BY: J.H.R. APPRV. BY: T.O. REV A

Appendix C-2
Broadwater LNG Project
Typical Subsea Pipe Ditch by Towed Plow - 5 feet of Cover

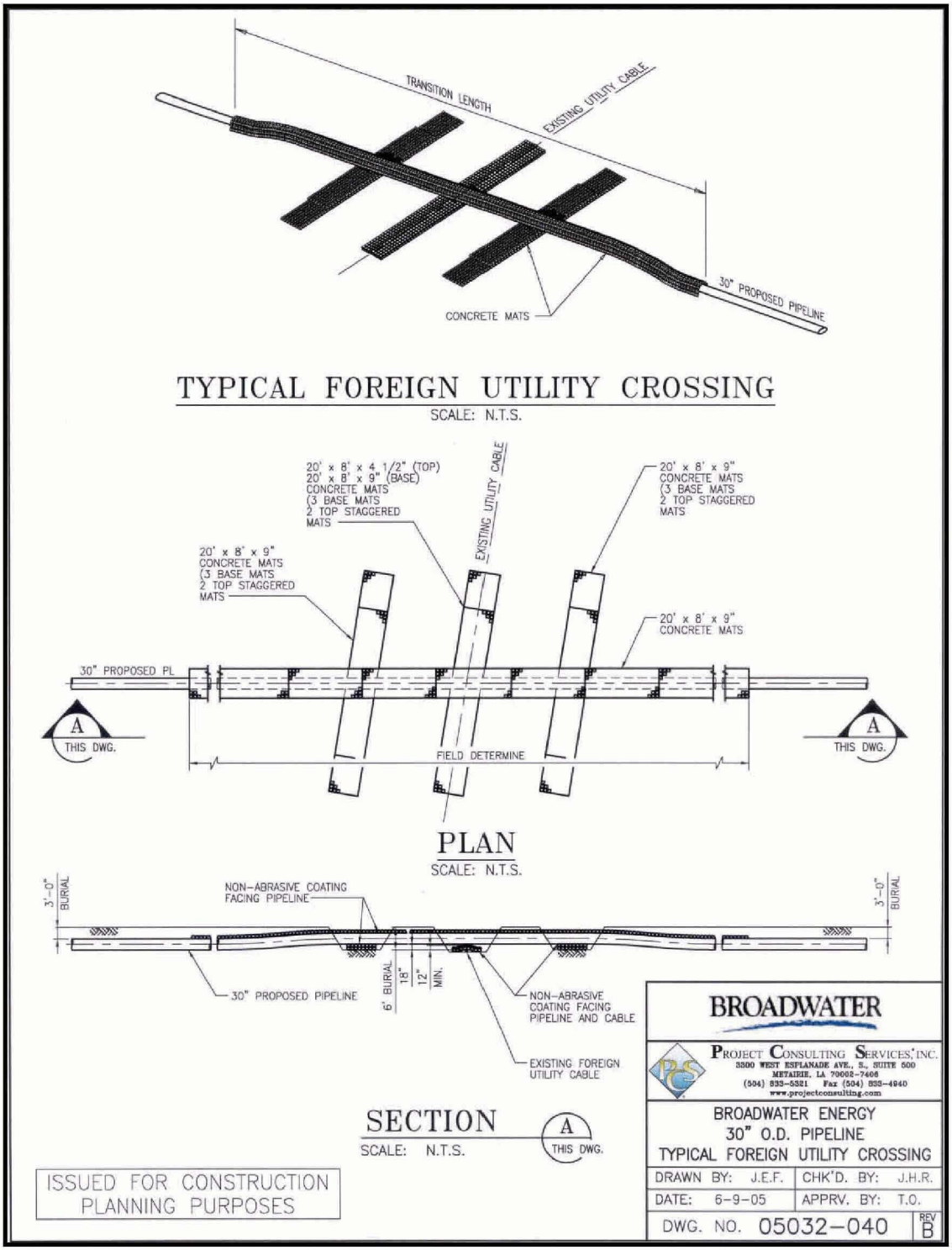

Appendix C-3
Broadwater LNG Project
Typical Foreign Utility Crossing

Non-Internet Public

DRAFT ENVIRONMENTAL IMPACT STATEMENT FOR THE BROADWATER LNG PROJECT
Docket Nos. PF05-4, CP06-54-000, and CP06-55-000

Appendix C-4
Proposed Pipeline Alignment

Public access for the above information is available only through the Public Reference Room, or by e-mail at public.referenceroom@ferc.gov.

Non-Internet Public

DRAFT ENVIRONMENTAL IMPACT STATEMENT FOR THE BROADWATER LNG PROJECT
Docket Nos. PF05-4, CP06-54-000, and CP06-55-000

Appendix C-5
Proposed Pipeline Alignment

Public access for the above information is available only through the Public Reference Room, or by e-mail at public.referenceroom@ferc.gov.